ISAS - INTERNATIONAL SCHOOL FOR ADVANCED STUDIES

THESIS

SUBMITTED FOR THE DEGREE OF

MAGISTER PHILOSOPHIAE

ON THE ROLE OF GRAVITATIONAL COLLAPSE IN A QUANTUM THEORY WITH CURVED SPACETIME BACKGROUND

CANDIDATE:

A. Bernui

SUPERVISOR:

Prof. W. Thirring

ACADEMIC YEAR

- 1984/85 -

TRIESTE

SISSA - SCUOLA
INTERNAZIONALE
SUPERIORE
STUDI AVANZATI
TRIESTE
Strada Costiera 11

a mis padres y hermanas

a mi shonkollay moti

ACKNOWLEDGEMENTS

I am very grateful to Prof. W. Thirring for introducing me to this topic and I am also grateful to Profs. W. Thirring, G.F. Dell'Antonio, H. Urbantke, H. Narnhofer and B.S. Kay for reading the manuscript, for their constructive criticism and for useful discussions.

CONTENTS

	NOTATIONS	0
I.	INTRODUCTION	1
(a)	Introductory survey	1
(b)	Introductory review and global structure of spacetime	9
II.	GRAVITATIONAL COLLAPSE	12
(a)	General remarks	12
(b)	Geodesic equation	15
(c)	Hydrodynamic's equations	18
(d)	Oppenheimer-Snyder equation	23
III.	QUANTUM FIELD THEORY IN CURVED SPACETIME	30
(a)	Introduction	30
(b)	Quantum field theory in Minkowski spacetime	33
(c)	Quantum field theory in curved spacetime without horizon	37
(d)	Quantum field theory in curved spacetime with horizon	41
(e)	Physical aspects of black hole emission	54
(f)	The wave equation $(\Box + m^2)\phi = 0$	58
(g)	Conclusions	62
	REFERENCES	64

NOTATIONS

In this work, we use metric signature (-,+,+,+). We also use (almost) throughout geometrized units, i.e. G = c = 1. Greek indices take the values: 0,1,2,3; and are used to denote time and space components in 4-dimensional spacetime, while latin indices are used to denote purely spatial components.

The following special symbols are used throughout:

∇_μ or $;\mu$	covariant derivative
a^+	adjoint of the operator a
ln	natural logarithm
k or k_B	Boltzmann's constant
$f^{(a,b)}$	$1/2\ (f^{a,b} + f^{b,a})$
$\mathscr{I}^+$, $\mathscr{I}^-$	future and past null infinity
i^+, i^-	future and past timelike infinity
i°	spatial infinity
κ	surface gravity

I. INTRODUCTION

a) INTRODUCTORY SURVEY

From the first philosophers, Plato (~428 to 348 B.C.) and Aristotle (~384 to 322 B.C.) the universe was considered stationary: "...is always in the same state" said Plato, and "...we find no trace of change either in the whole of the outermost heaven or in any of its proper parts....the shape of the heaven must be spherical..." said Aristotle |1|. This stationariness means that the relative distance between the cosmic bodies is constant in time. The universe of Aristotle was geocentric (i.e. Earth centered) which corresponds to the anthropocentric conception of the Greeks. The Earth was located at the center of the universe and the Moon, Sun, planets and stars were fixed to translucent heavenly spheres that revolved about the Earth. Subsequent elaborations of this system culminated in the Ptolemaic system of about A.D. 140.

The Middle Ages (~500 A.C. to 1500 A.C.) were a continuation and adequation of geocentric ideas to religions. Christians, Hebrews and Moslems were "blessed" with a "rational and well-organized" universe "in which they had utmost importance in a finite and unbounded Aristotelian universe that revolved about the Earth" |2|.

Nicolaus Copernicus (1473-1543) achieved the transition from the finite geocentric universe to the infinite and centerless universe. Based on observations he proposed in the middle of sixteenth century, an heliocentric (i.e. Sun centered) universe. He stablished the basis for modern cosmology. Afterwards Johann Kepler (1571-1630) established his laws for planetary motion in the beginning of the seventh century. Galileo Galilei (1564-1642) contributed to the development of the astronomy incorporating the telescope and establishing the observations as the true scientific method. What Galileo saw through his teles-

cope was not in accord with Ptolomeo's theory. His observations provided support to the Copernican theory, and in 1610 he interpreted the Milky Way as a collection of stars. Isaac Newton (1642-1727) lived in the company of brillant scientists who made systematic the threads of ideas of great thinkers since the Middle Ages. He constructed the theory of Gravitation for cosmic bodies,independently of the matter which the bodies in interaction are composed. "From his mind emerged the Newtonian universe governed by equations and quantitative laws of nature" |2|. According to this theory the universe is centerless and edgeless, and made secure the idea of an infinite universe. The Newtonian universe is stable on the cosmic scale, but inestable in finite regions where local gravity would cause irregularities of matter to condense into cosmic bodies. These bodies, infinite in number, are uniformly distributed and at rest relative to each other, which do not fall towards each other because there is no preferred point of condensation. But this infinite, unbounded, uniform and static universe though solves the problems created by old theories, raises a number of new ones. For example, the gravitational potential of the whole universe would be infinite. In an attempt to save the Newtonian theory was postulated that the Newtonian law of attraction should be weakened at large distances; this is achieved introducing a "cosmological term" to Poisson's equation. However, something graver were in the Newtonian's theory grounds. This was the Newton's conception of space. He said, "Absolute space in its own nature, without relation to anything external, remains similar and immovable". Bishop George Berkeley in 1721, in a work entitled "Motion" attacked the idea of absolute space. Berkeley instead said that "space by itself was emptiness, i.e. nothing", its only property is extension, and without matter there is no space, therefore absoluteness was meaningless, contraryly to that proposed by Newton. He also proposed that the inertia of any body is determined by the distribution and masses of all other bodies in the universe.

Ernst Mach, an Austrian physicist of the nineteenth century, expressed ideas essentially similar to those of Berkeley. Berkeley claimed that the motion, uniform or accelerated is relative, Mach developed this theme and proposed what is known today as Mach's principle: "all inertial forces are due to the distri-

bution of matter in the universe".

Albert Einstein (1879-1955) some years after incorporated this principle to the theory of general relativity. However, this is not the case "because the Einstein equations admit many solutions, including the flat Minkowski metric which contain no matter at all" |3|. In 1917, Einstein tried to apply his field equations (1915) to cosmology. In accordance with the then state of knowledge, he started from a static cosmological model. But in order to get a static model of our universe, he had to introduce the "cosmological term" $\Lambda g_{\mu\nu}$ into the field equations, similar tentative to that made by Newton years ago. But in 1930, Hubble discovered the expansion of the universe, thus no longer was the cosmological term necessary. Afterwards Einstein called the cosmological term: "the biggest blunder of my life". After this, he abandoned it and returned to his original geometrodynamic field equations.

In 1922, A. Friedmann (1888-1925) showed that the Einstein's equations admit spatially isotropic, homogeneous solutions representing a uniform distribution of expanding matter. These solutions do not require a cosmological term to balance the gravitational attraction of matter, because the matter is not stationary, as the observations proved. In this models the universe had a beginning at a singularity at finite time in the past, and is now in expansion. At present there are Friedmann cosmological models with "cosmological term" which yields stationary and non-stationary universes, hence the unique way to decide which is the realistic model that represents our universe is via accurate observations. The conclusion that the universe is evolving was strengthened by the discovery in 1965 of microwave background radiation with a thermal spectrum at 3°K. The only apparent reason for this radiation is that it is a remnant from an earlier hot, dense phase of the universe, the so-called "big-bang", which represents the singularity origin of our universe.

The fact that the Friedmann's models do not reflect the local irregularities such as stars and galaxies were pointed out, and in 1946 Lifshitz improved this models using a linearized aproximation, finding that small density enhancements would grow, but only rather slowly. A class of deviations from the Fried-

mann's model, which can be analysed beyond this linear approximation, are those which are anisotropic but spatially homogeneous. But the observed isotropy of the cosmic microwave background radiation limitates any large-scale anisotropic model. Between the possible reasons that explain why the universe is so isotropic now, "even if it began in a chaotic state, include particle creation in the very early universe and neutrino viscosity at a slightly later epoch" |3|.

In 1939, J.R. Oppenheimer and H. Snyder showed that a possible outcome in the life of a star should be to undergo a "gravitational collapse". This means that the internal structure of the cosmic body can no more support the pressure due to gravitational forces, therefore the star contracts. What happens after that depends on the initial conditions and of the internal structure of the star. This will be treated in detail in Chapter II.

The problem of gravitational collapse leads to another important question: What does happen if the collapse goes on indefinitely? Then, the star collapse to a singularity. An approach to the ocurrence of singularities was done in 1965 by R. Penrose. He used global geometrical constructions of spacetime, converting asymptotic calculations into calculations at finite points, just bringing "infinite" into a finite distance. These global methods were extended and applied to cosmology by Hawking and Geroch at the end of the sixties. But, a satisfactory definition of a boundary of spacetime (singularity?) appears only in 1970 and was given by B.G. Schmidt |1|. In 1970, Hawking and Penrose proposed their "singularity theorem", according to which, if: (i) the spacetime satisfies the causality condition (the manifold M contains no closed timelike curves), (ii) the energy condition is satisfied, (iii) the manifold M is "general", i.e. not too highly symmetric, and (iv) the manifold contains a trapped surface; then the spacetime representing the universe should contain a singularity, which would be a beginning of time for at least some timelike or null geodesic. The generality of the theorem does not allow one to conclude that this is true for all timelike or null geodesics. However, "it seems likely that this is the case in generic solutions" |3|.

Always in the frame of classical general relativity, this singularity

theorems (for details see |6|) also imply that a singularity is inevitable in the gravitational collapse of a star, once it has passed a "point of no return". As the star collapses, the density increases and the gravitational field becomes so strong that it drags back any further light eventually emitted by the star when the "point" is reached. However, to a distant observer in the outside world the falling star never attains the singular state. The gravitational redshift gets progressively greater and the star appears to fall more and more slowly. As the star approaches the "point", the redshift approaches to infinite. The star reddens, darkens quickly into blackness and remains forever at the "critical size", which is called the "event horizon". The collapsed star to a singularity, which lies inside the event horizon,is called a "black hole". Thus, the event horizon is the surface of the black hole where the spacetime falls inward at the speed of light. Nothing, not even light, can now escape to the outside world. The ultimate fateof gravitational collapse is hence concealed from the outside world: a no-naked singularity is developed.

Suppose that some information could escape from a collapsing star, then the singularity would become visible "in all its nakedness" to the outside world. Naked singularities of crushed matter to "infinite density", go beyond our understanding of known laws of physics, are so appalling a prospect, at least classically that, a criterion for its non occurrence has been developed; it was called "cosmic censorship" by Penrose. It says that "all singularities are cloaked from the view of the outside world by event horizons and that nature conspires in every way possible to avoid naked singularities" |2|. despite considerable effort, the cosmic censorship hypothesis remains undecided, because one does not wish to consider inessential singularities caused by bad choices of coordinates or matter singularities that reflect the failure of a phenomenological description of the material content. According to W. Israel |4|, there are two versions: the "weak cosmic censorship", which postulates that all singularities formed in a gravitational collapse are enclosed within event horizons and hence invisible to a distant observer; and the "strong cosmic censorship", which requires any generic singularity to be spacelike, hence invisible to every observer unless and until

he actually encounters it. But at present the belief is that "Thorne's hoop conjecture" is likely the better criterion. It says that an event horizon will form whenever a mass M is compacted within a region whose circumference in every direction is less than $2\pi(2GM/c^2)$.

In 1971-1972, Hawking concluded: "all stationary black holes must have a horizon with spherical topology, and they must either be static (zero angular momentum) or axially symmetric or both." Some years before, 1967-1968, Israel affirmed that all static black holes are characterized uniquely by his mass M and charge Q, and they have the Reissner-Nordström form. B. Carter in 1970 arrives to the following important result: all uncharged, rotating black holes fall into distinct and disjoint families with each black hole in a given family characterized uniquely by M and S (angular momentum). Finally, in 1982, P. Mazur generalized this result for the case in which the black hole is charged ($Q \neq 0$). The extract of these results is what is called "no-hair theorem", roughly speaking it says that when a system undergoing gravitational collapse settle down to a stationary ($S \neq 0$) black hole, then the stationary state is described by the Kerr-Newman family of solutions which depends only on three parameters: the mass M, the angular momentum S and the electric charge Q of the black hole. A real black hole interacting with the rest of the universe will not be in an exactly stationary state, but in many cases it can be treated as a small perturbation from the Kerr-Newman solution.

In 1971 Hawking showed that the surface area of the event horizon can never decrease with time, assuming that the energy density of matter is non negative and a version of cosmic censorship. Bekenstein in 1972 connected the property that the area of the event horizon can never decrease with the fact that in a thermodynamic system the entropy also can never decrease. He claimed that the area of the event horizon could be regarded as the entropy of the black hole. However, to assign a finite entropy to a black hole would imply that it should have a finite temperature and that it should be able to remain in equilibrium with thermal radiation at the same temperature. But, how can a black hole emit and absorb radiation if clasically (and this is the point!), i.e. according to

classical general relativity, a black hole can only absorb and never emit radiation?

In 1974, Hawking |83| discovered that applying quantum mechanics to matter fields in the background geometry of a collapsing star which settles down to a stationary black hole, produce a steady rate of particle creation (from vacuum state) and emission to infinite. Although this final steady rate of emission does not depend on the details of the collapse, in order to produce it, it is necessary that a collapse occurs (see Chapter III) and, in order to understand this phenomena "it is essential to consider not only the quasi-stationary final state of the black hole, but also the time-dependent formation phase" |54| . The emitted particles would have a thermal spectrum with a temperature proportional to the "surface gravity" (a measure of the strength of the gravitational field at the event horizon; for a Scharzschild black hole it is $1/4M$) of the black hole. This emission answers the above question, because it enables the black hole to remain in equilibrium with thermal radiation at the same temperature.

There are several ways to explain this thermal radiation, but the easiest to understand is the one given by Hawking |3|. His arguments are the followings: the Uncertainty Principle implies that the "empty space" is filled with pairs of "virtual particles and antiparticles" which appear simultaneously at the same point of spacetime, move apart and then come together again and annihilate each other. If a black hole is present, one member of the pair may fall into the hole leaving the other without a partner with whom to annihilate. The forsaken particle (or antiparticle) has two possibilities either to fall into the black hole too or to escape to infinity where it will appear as a particle (or antiparticle) emitted by the black hole (see Fig. 8). This will be treated in detail in Chapter III.

The fact that the radiation is "thermal" (note that a true thermal radiation means an interchange of energy between the body and his medium, while in this case, as we will see later, the black hole only absorb negative energy; in the future we will omit the quotation marks) means that it has an extra degree of randomness or unpredictability over the one normally associated with quantum mechanics. Unlike in classical or quatum mechanics, in the case of particles emitted

by a black hole, one can definitely predict neither the position nor the velocity.

For solar masses black holes ($M_\odot = 1.47 \times 10^5$ cm $= 1.98 \times 10^{33}$ g) the predicted temperature is only about 10^{-7} K, so the radiation will be completely negligible and swamped by the 3K microwave background. However, the so-called "primordial or micro-black holes" formed by the collapse of inhomogeneities in the hot early stages of the universe, which have a mass of about 10^{15}g or less and a radius of about 10^{-13}cm, would emit energy at a rate of about 6×10^3 megawatts, mainly in gamma rays, neutrinos and electron-positron pairs. The emitted energy would be balanced by a flux of negative energy through the event horizon into the black hole.

The most probable final stage of a black hole is its complete disappearing (evaporation?) leaving just the thermal radiation that it emitted during its "evaporation". In this case, one would have non-conservation of baryon numbers because the disappearence would be so quick that the temperature of the black hole could not be so high as to create baryon-antibaryon pairs. At low temperature it will radiate only zero rest-mass particles like neutrinos, photons and gravitons. The lifetime of this micro-black holes is about the age of the universe, i.e. $\sim 10^{10}$ yr, thus in this moment black holes of mass less than 10^{15}g would have practically disappeared. Measurements of the cosmic gamma-ray background around 100 Mev. fix an upper limit of about 200 per cubic light year for the average density of micro-black holes. "To do better than this one would have to try to detect individual black holes by the burst of very rapid emission that they would produce at the end of their life" |3|.

The work that will be described is based, as we shall see, on classical general relativity and quantum field theory on a curved spacetime background. At the moment a consistent quantum theory of gravity or quantum gravity does not exist, thus we shall consider the "semiclassical aproximation" in which the gravitational field is treated classically, while the matter fields are quantized in the usual way.

b) INTRODUCTORY REVIEW AND GLOBAL STRUCTURE OF SPACETIME

In the theory of general relativity, we need basically two "things":
(i) A model for our physical world: a spacetime denoted by $(M, g_{\mu\nu})$ which consists of a four-dimensional manifold M (representing the physical events), plus a symmetric 2-form $g_{\mu\nu}$ called a metric, of Lorentz signature equal to m-2 = 4-2 = 2 (representing the results of measurements of spatial distances and elapsed times).
(ii) A glue between geometry and matter, which is achieved with the field equations $R_{\mu\nu} - \frac{1}{2} g_{\mu\nu} R = 8\pi T_{\mu\nu}$, a realization of the genius of A. Einstein. The left-hand side of this equation represents the geometry of the spacetime background, and the other side the matter part.

Experiments carried out by Galileo, Eötvos, Dicke, Bragisky and Kreuzer indicates that gravity couples only to the energy content of a body; therefore matter is involved only through its energy-momentum tensor $T_{\mu\nu}$. The above equations, called field equations because as is universaly accepted the interactions are developed using the field as an intermediary, have some remarkable features:
(i) Einstein's equations tend to Newton's equations if we are dealing with small masses, large separations and low velocities.
(ii) The incognite of this equations is the metric $g_{\mu\nu}$, which they determine up to a coordinate transformation, given initial data on some spacelike surface.
(iii) They are divergenceless, i.e. $T^{\mu\nu}{}_{;\nu} = 0$. This implies local conservation of the energy-momentum tensor. The curvature of the metric, in general, prevents them from being integrated globally. The divergenceless property implies also that test bodies move along geodesics (world-lines) of the metrics.

However, Einstein proposed a solution to the problem of the non-localizability of gravitational energy, provided that the metric $g_{\mu\nu}$ tends to $\eta_{\mu\nu}$ = diagonal(-1,1,1,1) whenever $x \equiv x^{\mu} = (t,x,y,z)$ tends to the spatial infinite (i.e. if the spacetime we are dealing with is asymptotically flat) |3|.

The "global structure of spacetime" refers to certain features of such models, including for example, the issue of what is the underlying manifold, the qualitative behavior of the light-cones, the possibilities for oriontation of them,

causal structure and possible causality violations, the existence and properties of spacelike surfaces, etc.(for details and usual conventions about this, see for example |5|).

What the underlying manifold of our universe is? This is genuinely an experimental question in that, if one had access to all regions of our spacetime, then one could determine the answer. Since at least some observations have been made on our universe, one might hope that some information might be obtained about its underlying manifold. Unfortunately the observational effects due to the underlying manifold seem to be completely dominated by the observational effects due to the fields on that manifold. For example the solutions representing collapsing spherical dust clouds, the static fluid ball solutions,the open Friedmann solutions and Minkowski spacetime, all have the same underlying manifold: $\mathbb{R}^4$. The maximally extended positive-mass Scharzschild solution ("a wormhole connecting two asymptotically flat regions"), the negative-mass Scharzschild solution and the Reissner-Nordström solution all have the same underlying manifold: $S^2 \times \mathbb{R}^2$. The underlying manifold for the closed Friedmann models is $S^3 \times \mathbb{R}$. In these examples, spacetimes have different physical characteristics; none the less they have the same topology. Even such great features as singular behavior, or the presence of one or many asymptotically flat regions, does not seem to be recorded in the topology. In short, at least as far as physical effects are concerned, the geometry dominates the topology |5|.

For our purposes, we shall assume that "manifold" means without boundary, Hausdorff, connected and paracompact. Let's see why it is so?: the boundary of a manifold would represent physically an "edge" to spacetime, while such edges have never been observed; a non-Hausdorff manifold is a manifold in which there are two points (at least) which cannot be separeted by disjoint neighbourhoods, and such behavior would perhaps violate what we mean physically by "distinct events"; in a non-connected manifold communication could never be carried out between the separate non-connected components; and in a non paracompact manifold some connected components could not be covered by a countable collection of coordinates patches.

According to |6|, if the paracompactness requirement is given, then the

structure of affine connections can be constructed. This structure gives the covariant derivative operator.

We further suppose that our spacetime is space and time orientable, and stably causal (hence admits achronal slices |5|). We are also assuming that these concepts and those of: past and future, slices, domain of dependence, domain of influence, Cauchy surface, Cauchy horizon, singularity, asymptotically flat spacetime and event horizon, are true in the sense of |5|.

With respect to the interpretation of the metric, related to the questions of:

(i) explaining how the coordinates could be observed, or

(ii) predicting coordinate-independent relationships between observable invariants,

there is the practical compromise of using coordinates which are fairly well defined and using relationships which seem to be meaningful.

II. GRAVITATIONAL COLLAPSE

a) GENERAL REMARKS

The problem of gravitational collapse arises because gravitational forces are attractive. There are two features of these gravitational interactions that distinguish them from other interactions |7|:

(i) extreme weakness, and

(ii) great universality.

If we compare for example, the electrostatic force and the gravitational force, we find that:

$$\frac{G m_p^2}{r} = 0.8 \times 10^{-36} \frac{e^2}{r} \qquad \text{(II.1)}$$

i.e. the gravitational attraction between two protons is 0.8×10^{-36} less than the electric force. We can also define something which corresponds to the fine structure constant α, namely the gravitational fine structure constant α_G. Since $\alpha \sim 10^{-2}$, we find that |7|: $\alpha_G = 0.5 \times 10^{-38}$, this is an exceedingly small number and therefore we conclude that on the elementary particle level, the gravitational force is completely negligible. Furthermore, comparing the gravitational potential V_G between two electrons and the weak potential V_W, we find that for distances $r > 10^{-7}$ cm the gravitational force dominates over the force we get from weak interactions. Therefore, for large enough distances the gravitational force will win over the electromagnetic and weak forces.

By universality we mean the universal way in which it is coupled to all other particles. The fact that all the objects are subjected to the universality of gravitation implies that they influence the observable metric of spacetime. For cosmic bodies, this universality makes the action of gravity sum constructively to such an extent that it dominates the electric and nuclear forces. What is the parameter that indicates when gravity starts to dominate the other forces?

It is N, the number of particles. Let's calculate it roughly. The gravitational energy of N protons of mass m, in a volume V is of the order of

$$E_G \sim \frac{-G(Nm)^2}{V^{1/3}} = -Gm^2 N^{2/3} N \rho^{1/3} \quad , \quad \rho = \frac{N}{V} \qquad \text{(II.2)}$$

The total electrostatic energy is of the order of

$$E_e \sim -e^2 N \rho^{1/3} = \frac{e^2}{G m^2 N^{2/3}} E_G \qquad \text{(II.3)}$$

and we see that if $N \sim (e^2/Gm^2)^{3/2} \sim 10^{54}$, then gravity starts to dominate the electrical force, i.e. the Newtonian potential supplants the Coulomb potential as the determiner of the structure. In a larger body, gravity crushes the atoms together and the matter turns into a highly compressed plasma |8|.

The life of a typical star will consist of a long ($\sim 10^9$ yrs) quasi-static phase in which it is burning nuclear fuel and supporting itself against gravity by thermal and radiation pressure (remember that the pressure in matter comes from the electrons, while the protons give rise to the energy density). However, when the nuclear fuel is exhausted, the star will cool, the pressure will be reduced and so it will contracts. Now, suppose that this contraction cannot be stopped by the pressure before the radius becomes less than the Scharzschild radius and indeed, this happens if the mass of the star is greater than a certain critical value, then (we assume throughout that the star is spherically symmetric, thus by Birkhoff's theorem the solution outside the star is the Schwarzschild solution) there will be developed a closed trapped surface $\mathcal{T}$ around the star (see Fig. 1) and, by a theorem of Hawking and Penrose, 1970 (|6|, p. 266) a singularity will occur provided that causality is not violated and the appropriate energy condition holds. Even if the star is not exactly spherically symmetric, a closed traped surface will still occur providing the departure from spherical symmetry is not too big. The existence of a trapped surface is implied by the fact that the gravitational collapse has proceeded beyond a certain point. Physically, under certain circunstances this point is in fact a point of no return.

In a hot body there will be, in addition to thermal and radiation pressure, the degeneracy pressure of electrons. In cold matter, at densities lower than that of nuclear matter ($\sim 10^{14}$ g.cm^{-3}) the only significant pressure will ari-

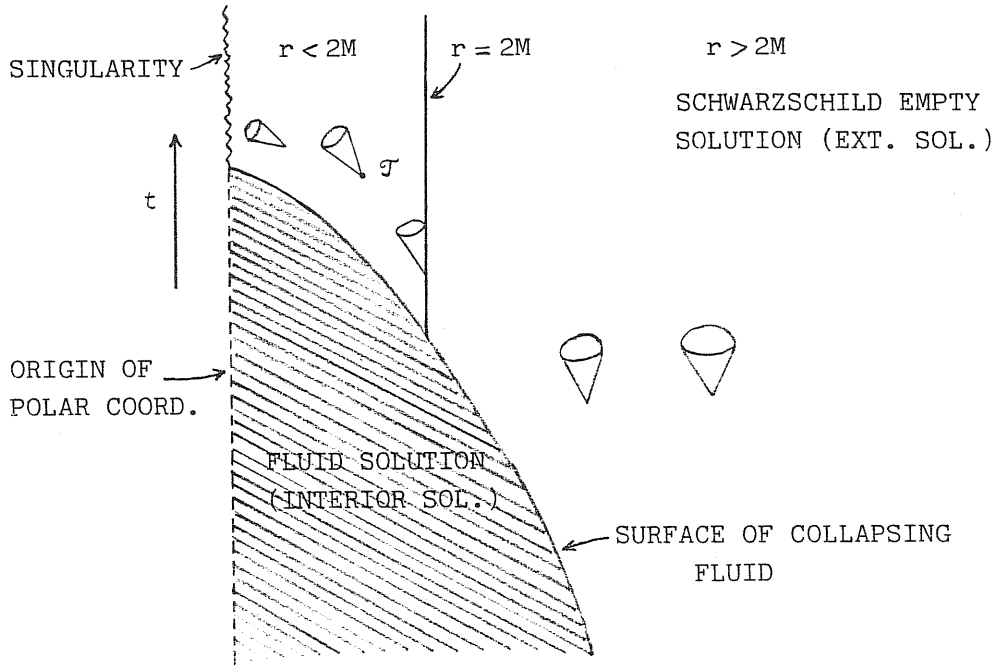

Fig. 1(a)

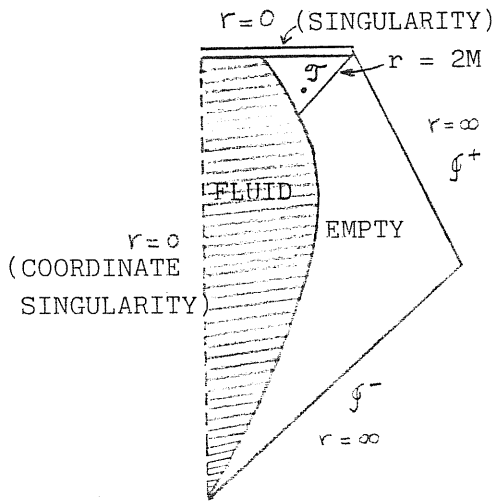

Fig. 1(b)

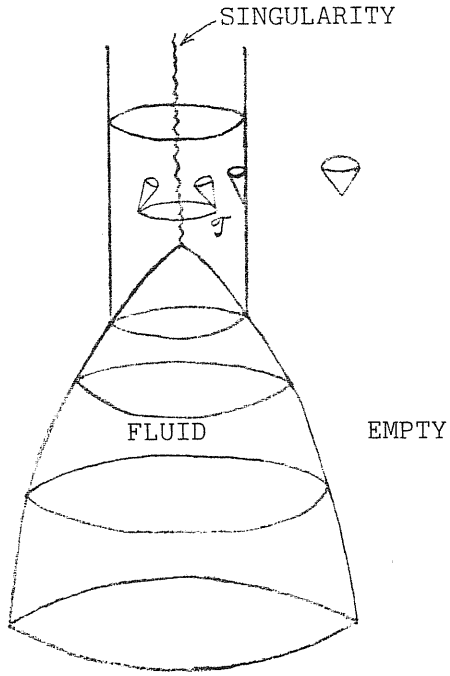

Fig. 1(c)

Fig. 1. Collapse of a spherical star |6|.

(a) Finkelstein diagram ((r,t) plane). Each point represents a two-sphere.

(b) Penrose diagram of the collapsing fluid ball.

(c) Eddington-Finkelstein diagram of the collapse with only one spatial dimension suppressed.

$\mathcal{T}$ is the closed trapped surface.

se from the quantum mechanical exclusion principle.

For large bodies self-gravity will be important, and will compress the matter against the degeneracy pressure. Considering only Newtonian arguments we obtain easily approximative orders of magnitude. Consider a star of mass M and radius r_o . The gravitational force on a typical unit volume ($\sim(M/r_o^2)n.m_n$) will be balanced by a pressure gradient ($\sim p/r_o$), where n is the number density of fermions, m_n is the nucleon rest-mass and p is the average pressure in the star. If the density is sufficiently low, so that the main contribution to the pressure is from the degeneracy of non-relativistic electrons, then ($n.m_n = M/r_o^3$ is the mass density):

$$p = \hbar^2 n^{5/3} m_e^{-1} = M^{2/3} n^{4/3} m_n^{4/3} \qquad \text{(II.4)}$$

Such stars are known as"white dwarfs". While, if the density is so high that the electrons are relativistic, then:

$$p = \hbar n^{4/3} = M^{2/3} n^{4/3} m_n^{4/3} \qquad \text{(II.5)}$$

From this we obtain a limit mass of the star M_L, which is able to support by the degeneracy pressure of the relativistic electrons the gravity force. This upper limit mass is:

$$M_L = \hbar^{3/2} m_n^{-2} \cong 1.5\, M_o \qquad \text{(II.6)}$$

In fact, when the electrons become relativistic, they tend to induce inverse beta decay:

$$e^- + p \longrightarrow \nu_e + n$$

producing in this way neutrons. This denudes the electrons and hence reduces their degeneracy pressure, there causing the star to contract. This is an unstable situation, and the process will continue until nearly all the electrons and protons have been converted in neutrons. At this stage, equilibrium is again possible with the star supported by the degeneracy pressure of the neutrons. Such a star is called a "neutron star". Again if the neutrons are relativistic, the star must have a limit mass M'_L . Considering an ideal neutron Fermi gas and using the relativis-

tic equation of hydrostatic equilibrium, Oppenheimer and Volkoff |9| found:

$$M'_L \sim 0.7\, M_\odot \qquad \text{(II.7)}$$

for non-rotating models. More recents results, with other equations of state give a range of values for the maximum mass between $1.3M_\odot$ and $2.7M_\odot$ |10|. The conclusion is that a cold star of mass greater than M_L (M'_L) cannot be supported by electron (neutron) degeneracy pressure. To see this rigorously, see for example |6|, p.304; and to see more references about this problem see |11|.

There are three types of gravitational collapse |12|:

(i) Stabilized collapse, occurs when matter congulates under the influence of gravity to form relatively stable objects such as galaxies, stars and planets which evolve in quasi-static ways.

(ii) Catastrophic collapse, occurs when matter is in (or nearly) free-fall with increasing density. The mathematical model of this is given by the Oppenheimer-Snyder solution which we shall study later. Some models of the universe terminate in a catastrophic collapse; and expanding models have a time-reversed collapse at the beginning.

(iii) Dynamical collapse, closely related to the catastrophic collapse, consists in a phase of nearly free-fall which is eventually terminated by the formation of a central mass which again undergoes a phase of quasi-static evolution. Of this type are the supernova theories.

The most important role in the study of gravitational collapse of fluid masses is played by the equation of the state.

b) GEODESIC EQUATION

The most efficient method to obtain geodesics is to use a variational principle, equivalent to the geodesic differential equations, and proceeds to describe the solutions (geodesics) by techniques adopted from Lagrangian mechanics. However, the Euler-Lagrange equations which arise from the variational principle $\delta L = 0$ (where $L = \int |g_{\mu\nu}(dx^\mu/d\lambda)(dx^\nu/d\lambda)|^{1/2}\, d\lambda$) are not quite the geodesic equation. This is because L is invariant under arbitrary changes of parametriza-

tion of the curve, $\lambda \longrightarrow f(\lambda)$; whereas the geodesics equations determine the curve parameter λ to within a linear transformation $\lambda \longrightarrow a\lambda + b$. To have a variational principle which imposes this restriction on the parameter and gives the right equations, we should take $\delta I = 0$, where

$$I = \frac{1}{2}\int g_{\mu\nu}\, \dot{x}^{\mu}\dot{x}^{\nu}\, d\lambda \quad , \quad \dot{x}^{\nu} \equiv \frac{dx^{\nu}}{d\lambda} \qquad \text{(II.8)}$$

and then obtain

$$\ddot{x}^{\mu} + \Gamma^{\mu}{}_{\nu\alpha}\, \dot{x}^{\nu}\dot{x}^{\alpha} = 0 \qquad \text{(II.9)}$$

the geodesic equation. This equation is important for the following: we know that the world-line of a free-falling particle is just a geodesic. Many of the most interesting features of gravitational collapse can be studied in the problem of free-falling test particles, in the gravitational field of a central mass (cosmic body) as described by the Scharzschild metric.

The Scharzschild metric is:

$$ds^2 = -(1-2Mr^{-1})\,dt^2 + (1-2Mr^{-1})^{-1}dr^2 + r^2 d\Omega^2 \qquad \text{(II.10)}$$

where $d\Omega^2 = d\Theta^2 + \sin^2\Theta\, d\psi^2$, (r, Θ, ψ) are the usual spherical coordinates. The integral to be varied is $I = \int \mathcal{L}\, d\lambda$, where $\dot{t} = dt/d\lambda$ and

$$2\mathcal{L} = g_{\mu\nu}(x)\,\dot{x}^{\mu}\dot{x}^{\nu} = -(1-2Mr^{-1})\dot{t}^2 + (1-2Mr^{-1})^{-1}\dot{r}^2 + r^2\dot{\theta}^2 + r^2\sin^2\theta\,\dot{\psi}^2 \qquad \text{(II.11)}$$

The conjugate momenta are $p_{\mu} = \partial\mathcal{L}/\partial\dot{x}^{\mu}$ and the "Hamiltonian" is equal to $\mathcal{L}$ |11|:

$$\mathcal{H} \equiv p_{\mu}\,\dot{x}^{\mu} - \mathcal{L} = \mathcal{L} \qquad \text{(II.12)}$$

We remark that $\mathcal{H}$ is not necessarily related to the energy, because $\mathcal{L}$ is not the kinetic minus the potential energy. We thus use the notation Hamiltonian or Lagrangian between quotation marks. Furthermore, λ is not the time, unlike in Lagrangian mechanics.

Note that the "Lagrangian" $\mathcal{L}$ is independent of ψ . Therefore the conjugate momenta

$$p_{\psi} = \partial\mathcal{L}/\partial\dot{\psi} = r^2\sin^2\theta\,\dot{\psi} \qquad \text{(II.13)}$$

is a constant of motion. Actually, the "Lagrangian" has full spherical symmetry,

and by considering the 3-parameter group of rotations one could find three angular momentum constants of motion, and prove formally that any solution of the geodesic equations lies in the "plane" equivalent to the "plane" $\Theta = \pi/2$. We shall set $\Theta = \pi/2$ from now on, in order to simplify the computations, without loss of generality. Then:

$$\ell \equiv p_\psi = r^2 \dot{\psi} = \text{const.} \qquad \text{(II.14)}$$

$$\gamma \equiv -p_t = -\partial\mathcal{L}/\partial\dot{t} = (1-2Mr^{-1})\dot{t} = \text{const.} \qquad \text{(II.15)}$$

But: $\mathcal{H} = -\partial\mathcal{L}/\partial\lambda$, which gives $\mathcal{H}$ = const., i.e. constant of motion. By rescaling the curve parameter λ in any particular solution ($\lambda \longrightarrow a\lambda$) one can change the value of $\mathcal{H}$ correspondingly ($\mathcal{H} \longrightarrow a^{-2}\mathcal{H}$) to achieve the standard values normally chosen:

$$2\mathcal{H} = g_{\mu\nu}\dot{x}^\mu \dot{x}^\nu = 0, \pm 1 \,. \qquad \text{(II.16)}$$

By using ℓ and γ to eliminate $\dot{\psi}$ and $\dot{t}$, the normalization equation (the last one) can be written:

$$(1-2Mr^{-1})(-\gamma^2 + \dot{r}^2) + \ell^2/r^2 = -1 \qquad \text{(II.17)}$$

in the case of a time-like geodesic. Rearranging terms we obtain:

$$\gamma^2 = \dot{r}^2 + (1-2Mr^{-1})(1+\ell^2 r^{-2}) \qquad \text{(II.18)}$$

This is not only a simple first-order differential equation for $r(\lambda)$, but also that it has the form

$$E = \frac{1}{2} m \dot{x}^2 + V(x) \qquad \text{(II.19)}$$

of the equation for a particle moving in one dimension under the action of a potential V(x). The qualitative description of the solutions of Eq.(18) (Eq.(18) means Eq.(II.18)) follows from the analysis of graphs V_{ef} versus r, where

$$V_{ef} = (1-2Mr^{-1})(1+\ell^2 r^{-2}) \qquad \text{(II.20)}$$

and considering large, critical and small values of the dimensionless angular momentum parameter ℓ^2/M^2. Thus, in Fig. 2, we contemplete the cases $\ell^2/M^2 \gg 12$, $\ell^2 = 12\,M^2$ and $\ell^2 < 12\,M^2$ $|12|$. When $\ell^2/M^2 \gg 12$ we find the usual Newtonian

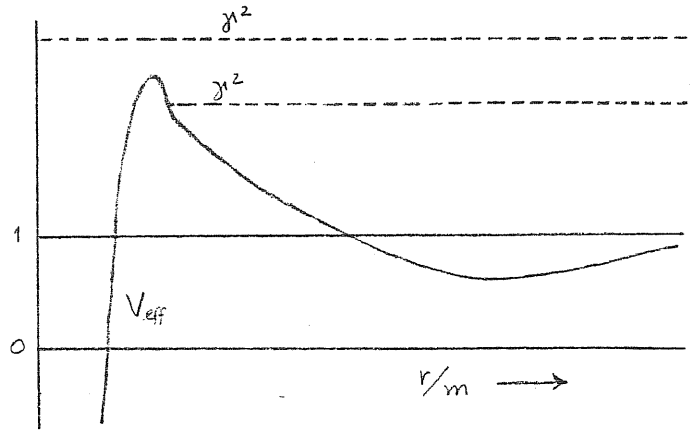

Fig. 2(a). Case $\ell^2/m^2 \gg 12$. If $|\gamma^2 - 1| \ll 1$ the orbits are Newtonian like in classi-mechanics, but a strictly relativistic energy $\gamma^2 > V_{eff,max} \gg 1$ gives a collapse orbit in which the fall continue to r = 0.

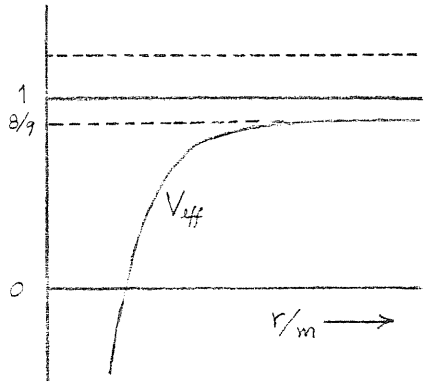

Fig. 2(b). Case $\ell^2 = 12\,m^2$. For an energy $\gamma^2 = 8/9$ there is an unstable circular orbit. Other energy orbits spiral in to r=0. An angular momentum as small as $\ell^2 = 12\,m^2$ cannot prevent collapse at any energy.

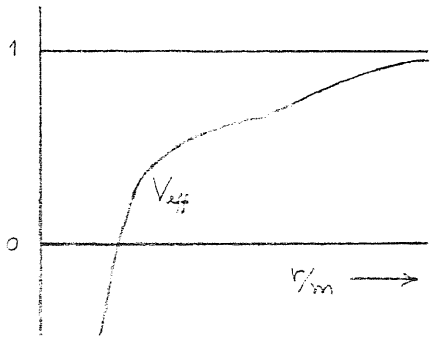

Fig. 2(c). Case $\ell^2 < 12\,m^2$. There are no circular orbits. All orbits spiral in to r=0.

Fig. 2. A plot of V_{eff} vs. r/m, |12|.

classification into elliptical, parabolic and hyperbolic orbits, although an exact solution would show discrepancies from the precise geometrical forms. However, at strictly relativistic energies $\gamma^2 \gg 1$, a new type of orbit is possible in which the particle penetrates the centrifugal potential $\ell^2/2r^2$ so deeply that it feels a relativistic "gravitational collapse force" $-M\ell^2/r^3$ and is pulled on into $r = 0$. At the smaller angular momentum shown in Fig. 2 (b) and (c), it does not require high energies for this collapse force to dominate, because the centrifugal force is very small.

Up to now we have studied cosmic bodies (stars) with only one parameter characterizing it, i.e. his mass M. The situation can be generalized by considering that this body has also charge Q and angular momentum L. Some of the features will be different, but others (just in which we are interested), can be (more or less) directly generalized, as for example, the Birkhoff's theorem |1| can be generalized to the case in which the star has charge Q, or the Scharzschild metric can be extended to the Kerr-Newman metric (|1,48|). In the case of particles interacting with collapsing stars, the general case (i.e. considering the Kerr-Newman metric) is treated in |13|. The particle motion in a Kerr field is treated in |14|.

The collapse of dust spheres in a Scharzschild background will be treated in detail later. The collapse of charged dust spheres require the use of the Reissner-Nordström metric |6| and is treated in detail in |15-25| and for charged thin shells in |26-29|. Regarding the oscillatory character of the Reissner-Nordström metric, the basic references are |30-32|. The collapse of rotating bodies using the Kerr metric and related topics, like the possibility that the angular momentum of the star can stop the collapse are discussed in |33-38|.

c) HYDRODYNAMIC'S EQUATIONS

A perfect fluid is by definition one in which there are no shear stresses and no heat transfer. This means that in a suitable local Lorentz frame the stress-energy tensor will have the form: $T^{\mu\nu} = \text{diagonal}(\rho, p, p, p)$, since T^{0i} components

could be interpreted as an energy flux heat flow, and if the space components $T_{ij} = p\,\delta_{ij}$ were not a multiple of the unit matrix, the distinguished eigenvectors of T_{ij} would be principal axes of shear stresses. To represent this tensor in some different frame, we must explicitly recognize the time axis $u^{\nu} = (1,0,0,0)$ of the Lorentz frame in which $T^{\mu\nu}$ was diagonal as a physically specified spacetime direction, as the 4-velocity of the fluid, and then define in this special frame the stress-energy tensor

$$T^{\mu\nu} \equiv \rho\, u^{\mu} u^{\nu} + p\,(g^{\mu\nu} + u^{\mu} u^{\nu}) \qquad \text{(II.21)}$$

which holds in all frames |39|, now that we have stablished it in one frame. The tensor equations:

$$T^{\mu\nu}{}_{;\nu} = 0 \qquad \text{(II.22)}$$

are the laws of local conservation of energy and momentum for any small element of fluid. They follows from the Bianchi identities and the Einstein equations |40, 1|.

The total baryon number for the fluid, i.e. the number of baryons minus the number of anti-baryons, is a conserved quantity (as the elementary particle physics has shown under the most extreme conditions known). This conservation law is written

$$(n\, u^{\nu})_{;\nu} = 0 \qquad \text{(II.23)}$$

where n is called the baryon number density or simply the matter density. The relativistic formulation of the hydrodynamics of a perfect fluid is then based on Eqs.(21),(22) and (23) supplemented by knowledge of the termodynamics properties of the fluid.

From Eqs.(21) and (22) we obtain, with the notations $\dot{\rho} = \rho_{,\alpha} u^{\alpha}$, $\dot{u}^{\alpha} \equiv u^{\alpha}{}_{;\beta} u^{\beta}$

$$T^{\mu\nu}{}_{;\nu} = (\rho+p)\,u^{\nu}{}_{;\nu}\, u^{\mu} + u^{\mu}\left[(\rho+p)_{,\nu} u^{\nu} + (\rho+p)\,u^{\nu}{}_{;\nu}\right] + p^{,\mu} = 0 \qquad \text{(II.24)}$$

thus, using $u^{\mu} u_{\mu} = -1$ and $u_{\mu} u^{\mu}{}_{;\nu} = 0$, then the equation $-u_{\mu} T^{\mu\nu}{}_{;\nu} = 0$ reads

$$\dot{\rho} + (\rho + p)\, u^{\mu}{}_{;\mu} = 0 \qquad \text{(II.25)}$$

which represents the local energy conservation law of the fluid. Considering the contraction of $T^{\mu\nu}{}_{;\nu}$ with the projection tensor $h^{\nu}{}_{\mu} = g^{\nu}{}_{\mu} + u^{\nu} u_{\mu}$, we obtain:

$$(\rho + p)\, \dot{u}^{\nu} + h^{\nu\mu} p_{,\mu} = 0 \qquad \text{(II.26)}$$

which represents the local momentum conservation law. This equation, also called Euler equation of relativistic hydrodynamics, shows that <u>the pressure gradient, and not gravity, is responsible for all deviation of flow lines from geodesics,</u> as we will see more explicitly.

Eqs.(25) and (26) must be completed by the specification of an equation of state in order to obtain the equation of motion of any element of the fluid.

As an application, regard the case of <u>dust</u>, which equation of state is $p = 0$. From this and Eq.(25) we obtain:

$$\dot{u}^{\nu} \equiv \frac{D u^{\nu}}{D \tau} = 0 \qquad \text{(II.27)}$$

which shows that the flow-lines of the matter (i.e. dust) are geodesics, as we have stablished before. From the state equation and Eq.(26)

$$(\rho u^{\nu})_{;\nu} = 0 \qquad \text{(II.28)}$$

which express the conservation of the total mass-energy density ρ (measured in the rest system of the matter).

Consider a spherically symmetric mass of fluid, sustained in static equilibrium against its self-gravitational forces. We have:

$$\begin{aligned} \rho &= 0 \quad , \; r > r_s \\ \rho &\neq 0 \quad , \; r \leq r_s \end{aligned} \qquad \text{(II.29)}$$

where r_s is the radius of the star. Thus, we are considering the vacuum outside the star and therefore the solution of the Einstein's equations outside is the Scharzschild exterior solution , Eq.(10), where

$$M(r) = \int_0^r \rho(r)\, 4\pi r^2 dr \qquad \text{(II.30)}$$

is the total mass (or energy) inside the sphere of circumference $2\pi r$. Of coarse, for $r \geqslant r_s$, $M(r) = \text{const.} = M(r_s)$. In the interior of the fluid, the pressure $p(r)$ and energy density $\rho(r)$ satisfies the Oppenheimer-Volkoff equation:

$$\frac{\partial p}{\partial r} = - \frac{\rho + p}{1 - 2Mr^{-1}} \cdot \frac{M + 4\pi p r^3}{r^2} \qquad \text{(II.31)}$$

and where M = M(r) is given by Eq.(30). This equation generalizes the non-relativistic fact that:

$$- \frac{\partial p}{\partial r} = \frac{\rho M}{r^2}$$

What are the conditions that determine that a star is free of physical singularities? i.e. what are the features of a star which is living "peacefully"? In order to answer to this question, let's suppose that, in Eq.(31), $\rho(r)$= const. $\neq 0$ for $r \leq r_s$. The reasonable boundary condition is that $p(r_s) = 0$. With the definition $r = a \operatorname{Sin}\chi$, where a is a constant, $\chi \in [0, \pi/2]$, we find:

$$p(\chi) = \rho \frac{\cos\chi - \cos\chi_s}{3\cos\chi_s - \cos\chi} \qquad \text{(II.32)}$$

From this equation we can see that the maximum pressure is achieved at r = 0. Thus, $p(0) = p_c > p(r)$, for all $r \leq r_s$ and:

$$p_c = \rho \frac{1 - \cos\chi_s}{3\cos\chi_s - 1} \qquad \text{(II.33)}$$

We see that, since

$$p_c \longrightarrow \infty \quad \text{as} \quad \sin^2\chi_s = \frac{2M_s}{r_s} \longrightarrow 8/9 \qquad \text{(II.34)}$$

in order to avoid physical singularities, the radius and mass of the star must satisfy:

$$\frac{2M_s}{r_s} < \frac{8}{9} \qquad \text{or} \qquad r_s > \frac{9}{8}(2M_s) \qquad \text{(II.35)}$$

This means that the star surface must be outside the Scharzschild radius $2M_s$.

If the pressure p(r) can not satisfy Eq.(31), then it is not possible to have static equilibrium and the star collapses. In order to see this process analitically, let's consider a spherically symmetric, homogeneous star, and outside the vacuum again:

$$\begin{aligned} 0 \neq \rho \neq \rho(r) \quad &, \quad 0 \neq p \neq p(r) \quad : r \leq r_s \\ \rho = 0 \quad &, \quad p = 0 \quad : r > r_s \end{aligned} \qquad \text{(II.36)}$$

Therefore, the solution inside the star corresponds to Friedmann's solution and

outside the star corresponds to the Scharzschild's solution. At the surface of the star, a 3-dimensional hypersurface t=const., we find the problem of match both solutions. This problem of junction conditions was treated in the general case by A. Lichnerowicz |41| and by W. Israel |42| in the spherically symmetric case, after that this had been studied previously by S. O'Brien and J.L. Synge |43|.

According to Lichnerowicz, from the mathematical point of view the simpler and satisfactory expression for the matching conditions is the assumption that there exists a coordinate system called "admissible" in which the metric tensor satisfies the continuity conditions:

(i) the precise continuity of the metric up to the third derivetive in a finite number of subdomains, and

(ii) the continuity of the metric and its first derivatives across each 3-dimensional space separating two subdomains.

However, it is not always easy to find admissible coordinates in which express the solution. Israel gave the junction conditions for the metric in the case of curvature coordinates, i.e. for which the line element is

$$ds^2 = -A(r,t)\,dr^2 - r^2 d\Omega^2 + B(r,t)\,dt^2$$

which are not admissible because they are derivable from admissible ones by a C^1-transformation; then he establishes junction conditions that are actually weaker than those proposed by Lichnerowicz. What has been done by C. Leibovitz |44| is to find some conditions to be imposed to the metric, considering comoving coordinates, so as to ensure the existence of an admissible system of coordinates obtainable by a coordinate transformation.

What continuity properties must the energy-momentum tensor and the metric (and its derivatives) have, in order that one can meaningfully speak of a solution to the Einstein equations? Consider qualitatively the results that we expect: if certain components of the energy-momentum tensor are discontinuos (but they exist!), then because of the field equations, the components of the curvature tensor are at worst discontinuous. But since the second derivatives of the metric are at most discontinuous, then the metric and its first derivatives must be continuous. Let's put

these arguments quantitatively in a |45|

Proposition.- Assuming that:

(i) the coodinates x^i are continuous across the junction hypersurface, and we use the same coordinate system on both sides of the hypersurface,

(ii) the hypersurface is not a null surface,

(iii) the energy-momentum tensor can indeed be discontinuous but should contain no -function singularities (i.e. surface layer structure should not occur),

(iv) the induced 3-metric g_{ab} on the junction hypersurface is continuous, that is:

$$g_{ab(in)} = g_{ab(out)} \qquad \text{(II.37)}$$

(v) the induced 3-extrinsic curvature K_{ab} is also continuous through the boundary surface

$$K_{ab(in)} = K_{ab(out)} \qquad \text{(II.38)}$$

then in the same coordinate system x^i, the curvature tensor $R_{\alpha\beta\mu\nu}$ is continuous through the junction hypersurface.

Remark.- Eq.(37) (Eq.(38)) ensures the equality of the intrinsic (extrinsic) curvature on both sides of the boundary surface. Remember that, if n^α is a normal vector of a non-null surface then $K_{\alpha\beta} = - n_{\alpha;\beta}$ is defined as the "extrinsic curvature" of that surface, i.e. of the curvature in relation to the surrounding space in contrast to the "intrinsic curvature" which is characterized by the 3-dimensional curvature tensor R_{abcd} of the surface alone.

d) OPPENHEIMER - SNYDER SOLUTION

The Einstein's equations for the Friedmann universe are

$$3\,\frac{\dot{r}^2 + K}{r^2} = 8\pi\rho \qquad \text{(II.39)}$$

$$-\frac{2\ddot{r}}{r} - \frac{\dot{r}^2 + K}{r^2} = 8\pi p \qquad \text{(II.40)}$$

where $\dot{r} \equiv dr/dt$ and K is a constant which tell us if the universe is closed ($K > 0$), flat ($K = 0$) or open ($K < 0$). The case $K > 0$ means that the universe will collapse in a finite proper time, $K = 0$ means (in a time-reversing picture) that the universe

starts to collapse at rest with infinite radius, and $K<0$ means that the universe starts to collapse with finite velocity and infinite radius. This cases can be seen in Fig.3 (b), in Kruskal-Szekeres coordinates.

From Eq.(40) we can obserb that a possitive pressure produce extra-gravity because it contributes negatively to $\ddot{r}$, then in a collapsing body, $p>0$ favors the collapse. With this argument we see that our physical system (that defined by Eq.(36)) is even qualitatively well analysed if we, for simplicity, consider the state equation:

$$p = 0 \qquad \text{(II.41)}$$

i.e. if we consider that our star is made of "dust". Thus our star is an spherically symmetric, homogeneous sphere of dust, in the middle of the vacuum universe:

$$\begin{array}{lll} \rho \neq \rho(r) \;, & p = 0 & : \quad r \leq r_s \\ \rho = 0 \;, & p = 0 & : \quad r > r_s \end{array} \qquad \text{(II.42)}$$

Therefore, in absence of pressure the star collapses. This problem was first treated by J.R. Oppenheimer and H. Snyder in 1939 |46|. They confront this problem because in a previous article, Oppenheimer and Volkoff |9| studied the gravitational equilibrium of neutron stars, as we have see above. They found that if the mass of the star is greater than 3/4 M_o then there are no static solutions for a spherical distribution of cold neutrons. Thus, if the star mass exceed this limit and it have used up their nuclear sources of energy, then the star will collapse under the influence of its own gravitational field.

However, them approach is not the best one because they assumed, for simplicity $K = 0$, hence their results are rather poor, but historically important. Now we follow the approach followed by Stephani |45| (see also |47|) and consider the three posibilities for K. Our model, Eq.(42), is not a trivial one because it yields an exact solution of the Einstein's equations which is valid in the whole space (inside and outside the star). Moreover, it satisfies the requirements of the proposition above, thus the match of Friedmann solution (inside) and Schwarzschild (outside) on the boundary surface is well performed and free of mathematical singularities.

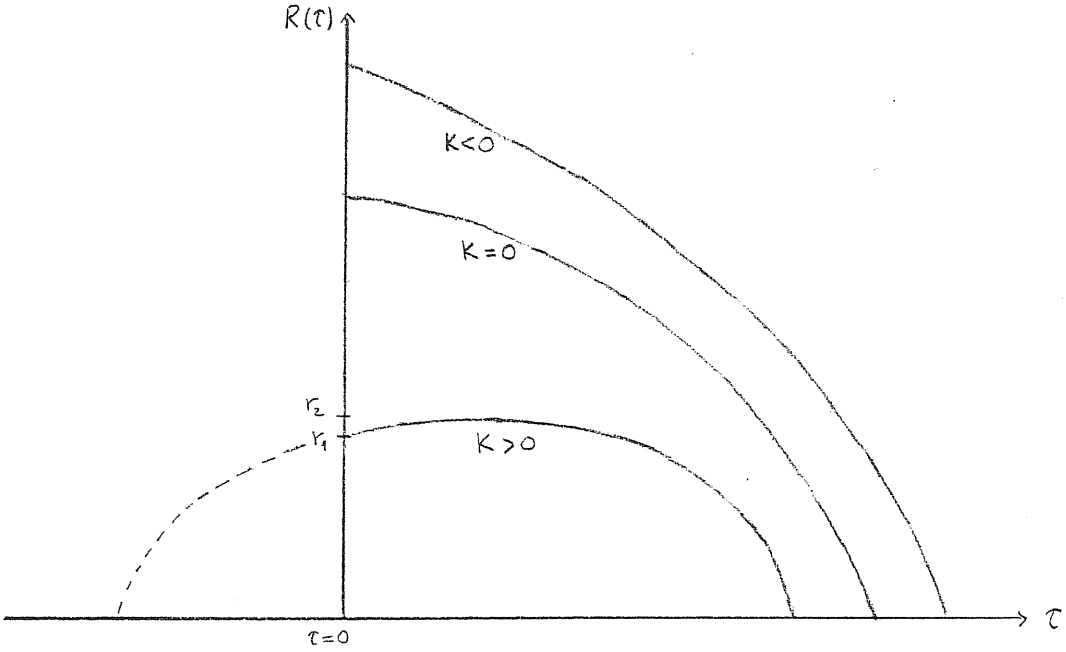

Fig. 3(a). Collapse of Friedmann universes (p=0), for the cases K > 0, K = 0, and K < 0.

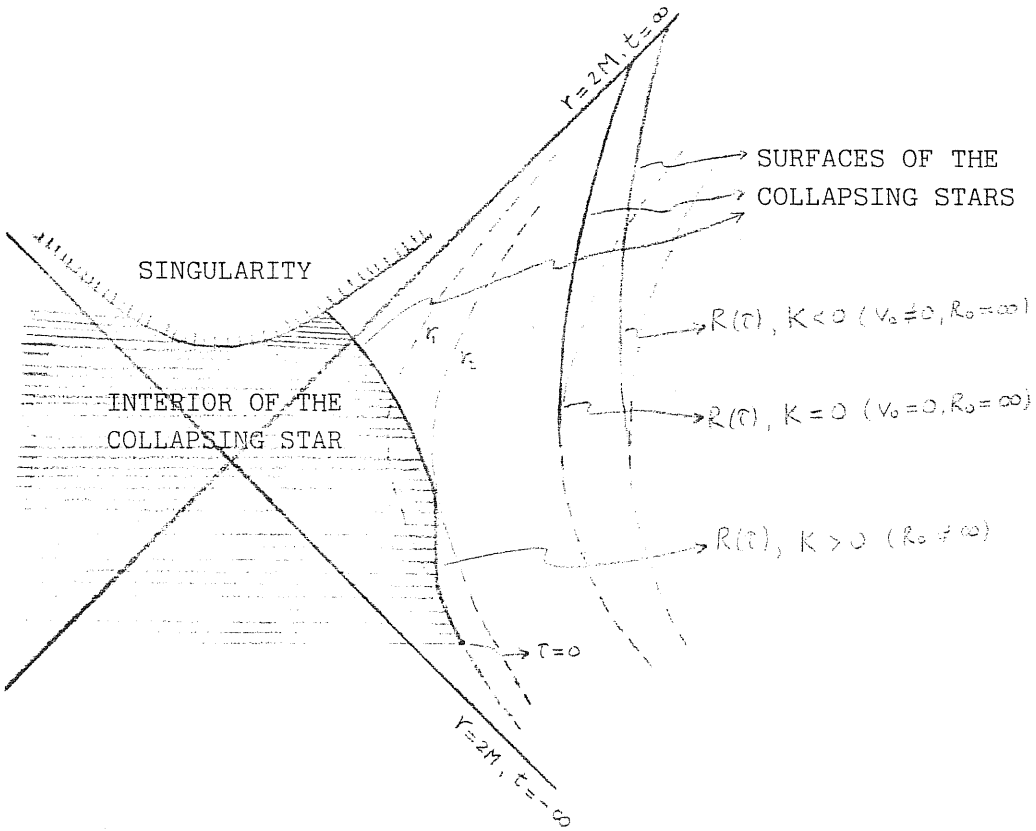

Fig. 3(b). Kruskal-Szekeres diagram for Friedmann (p=0) collapsing stars.

Fig. 3. Different types of Friedmann collapsing stars, depending on the value of the parameter K.

As the starting point we need a line element which express the spherical symmetry and a coordinate system which satisfy the requirements of the above proposition. Thus we carry out a transformation of the usual Schwarzschild coordinates (t, r, θ, φ) to the comoving coordinates $(\tau, \bar{r}, \theta, \varphi)$, where $t = t(\tau, \bar{r})$ and $r = r(\tau, \bar{r})$. Thus the coordinate τ is the proper time of a particle at rest in the coordinate system $(\tau, \bar{r}, \theta, \varphi)$, and the curves $\bar{r}$ = const., θ = const., φ = const. are geodesics. But from Eq.(27) we saw that the flow-lines of dust particles are geodesics, therefore the curves $\bar{r}, \theta, \varphi$ = const. represent the flow-lines of dust particles.

The line-element is therefore:

$$ds^2 = e^{\lambda(\tau,\bar{r})} d\bar{r}^2 + r^2(\tau,\bar{r})\, d\Omega^2 - d\tau^2 \qquad \text{(II.43)}$$

The field equations are the Einstein's equations

$$R^{\mu}{}_{\nu} - \frac{1}{2} g^{\mu}{}_{\nu} R = 8\pi T^{\mu}{}_{\nu}$$

where the only non-vanishing component of $T^{\mu}{}_{\nu}$ is $T^4{}_4 = -\rho(\tau, \bar{r})$, then with the notations: $\dot{} = \partial/\partial\tau$, $' = \partial/\partial\bar{r}$ we obtain:

$$R^1{}_1 - \frac{R}{2} = \frac{r'^2}{r^2} e^{-\lambda} - \frac{2\ddot{r}}{r} - \frac{\dot{r}^2}{r^2} - \frac{1}{r^2} = 0 \qquad \text{(II.44)}$$

$$R^2{}_2 - \frac{R}{2} = R^3{}_3 - \frac{R}{2} = \left(\frac{r''}{r} - \frac{r'\lambda'}{2r}\right) e^{-\lambda} - \frac{\dot{r}\dot{\lambda}}{2r} - \frac{\ddot{\lambda}}{2} - \frac{\dot{\lambda}^2}{4} - \frac{\ddot{r}}{r} = 0 \qquad \text{(II.45)}$$

$$R^0{}_0 - \frac{R}{2} = \left(\frac{2r''}{r} - \frac{\lambda' r'}{r} + \frac{r'^2}{r^2}\right) e^{-\lambda} - \frac{\dot{r}\dot{\lambda}}{r} - \frac{\dot{r}^2}{r^2} - \frac{1}{r^2} = -8\pi\rho \qquad \text{(II.46)}$$

$$R_{10} = \frac{\dot{\lambda} r'}{r} - \frac{2\dot{r}'}{r} = 0 \quad \Rightarrow \quad \dot{\lambda} = \frac{(r'^2)^{\cdot}}{r'^2} \quad \Rightarrow \quad e^{\lambda} = \frac{r'^2}{1 - \varepsilon f^2(\bar{r})} \qquad \text{(II.47)}$$

where $\varepsilon = 0, 1, -1$. The relation between ε and K is the following:

$$\varepsilon = K / |K| \quad \text{if} \quad K \neq 0 \quad \text{and} \qquad \varepsilon = K = 0 \quad \text{if} \quad K = 0$$

and where $f(\bar{r})$ is and arbitrary function of $\bar{r}$. Substitution in Eq.(44) leads to:

$$2r\ddot{r} + \dot{r}^2 = -\varepsilon f^2(\bar{r}) \qquad \text{(II.48)}$$

If now one choose r as the independent variable and $u = \dot{r}^2$ as the new dependent

variable, then one obtains the simple linear differential equation

$$\frac{d\,(r\mathcal{U})}{dr} = -\varepsilon f^2 \quad \Longrightarrow \quad \dot{r}^2 = -\varepsilon f^2 + \frac{F(\bar{r})}{r} \tag{II.49}$$

From Eqs.(49) and (46) we obtain:

$$8\pi \rho(\tau, \bar{r}) = \frac{F'}{r' r^2} \tag{II.50}$$

and, for $\varepsilon \neq 0$ we can introduce $dG = (f(\bar{r})/r)d$ and transform Eq.(49) into:

$$\left(\frac{\partial r}{\partial G}\right)^2 = \frac{F r}{f^2} - \varepsilon r^2 \tag{II.51}$$

and solve it considering $\bar{r}$ as a parameter, obtaining r as a function of τ and $\bar{r}$:

$$r = \frac{F(\bar{r})}{2f^2(\bar{r})}\, h_\varepsilon'(G)$$

$$\tau - \tau_0(\bar{r}) = \pm \frac{F(\bar{r})}{2f^3(\bar{r})}\, h_\varepsilon(G) \quad , \quad h_\varepsilon(G) = \begin{cases} G - \sin G \,, & \varepsilon = 1 \\ \sinh G - G \,, & \varepsilon = -1 \end{cases} \tag{II.52}$$

while for $\varepsilon = 0$ we have:

$$\tau - \tau_0(\bar{r}) = \pm \frac{2}{3} \left(F(\bar{r})\right)^{-1/2} r^{3/2} \quad , \quad \varepsilon = 0 \tag{II.53}$$

The general spherically symmetric solution of the field equations for the case of a collapsing dust sphere (p = 0) is

$$ds^2 = \left(\frac{\partial r}{\partial \bar{r}}\right) \frac{d\bar{r}^2}{|1 - \varepsilon f^2(\bar{r})|} + r^2(\tau, \bar{r})\, d\Omega^2 - d\tau^2 \tag{II.54}$$

$$8\pi \rho(\tau, \bar{r}) = \frac{F'(\bar{r})}{r^2 \left(\partial r / \partial \bar{r}\right)} \tag{II.55}$$

where $r(\tau, \bar{r})$ has to be taken from Eq.(52) or Eq.(53). The solution Eqs.(54) and (55) is known as Tolman's solution (1934). Of the three functions $F(\bar{r})$, $f(\bar{r})$ and $\tau_0(\bar{r})$, at most two have a physical significance, since the coordinate is defined only up to scale transformation $\bar{\bar{r}} = \bar{\bar{r}}\,(\bar{r})$. Of course one cannot simply specify the matter distribution $\rho = \rho\,(\tau, \bar{r})$ and then determine the metric, but rather through a suitable specification of $f(\bar{r})$, $F(\bar{r})$ and $\tau_0(\bar{r})$. Since the layers of matter which move radially with different velocities can overtake and cross one another, one must expect the occurrence of coordinate singularities in the comoving coordinates used here.

Let's apply the Tolman solution to an star of finite radius $\bar{r}_0$. To do

this we must to obtain an interior solution ($\rho \neq 0$) and an exterior solution ($\rho = 0$) and then join these two solutions smoothly at the surface of the star (the junction 3-dimensional hypersurface $\bar{r}$=const.) $\bar{r} = \bar{r}_o$.

We obtain the simplest "interior solution" when does not depend upon position (i.e. $\rho \neq \rho(\bar{r})$) and r has for a suitable scale the form:

$$r(\tau, \bar{r}) = \bar{r}\, R(\tau) \tag{II.56}$$

Considering Eqs.(39) and (40) we obtain:

$$p = -\frac{(\rho r^3)^{\cdot}}{(r^3)^{\cdot}} \tag{II.57}$$

thus, for the case p = 0, we have:

$$\rho R^3(\tau) = \text{const.} = M' \tag{II.58}$$

From the fact that $\rho \neq \rho(\bar{r})$ we find that, using Eq.(55):

$$F(\bar{r}) = \frac{8\pi}{3} M' \bar{r}^3 \tag{II.59}$$

With a dimensional analysis, from Eqs.(52), we conclude without loss of generality that

$$f(\bar{r}) = \bar{r} \tag{II.60}$$

and finally we assume that:

$$\tau_o(\bar{r}) = 0 \tag{II.61}$$

With Eqs.(56-61) we find the interior solution of the Friedmann's star expressed in comoving coordinates:

$$ds^2 = R^2(\tau) \left\{ \frac{d\bar{r}^2}{|1-\varepsilon \bar{r}^2|} + \bar{r}^2 d\Omega^2 \right\} - d\tau^2 \tag{II.62}$$

where:

$$R(\eta) = \frac{8\pi}{6} M' h_\varepsilon^1(\eta), \quad \tau = \frac{-8\pi}{6} M' h_\varepsilon(\eta), \quad h_\varepsilon(\eta) = \begin{cases} \eta - \sin\eta, & \varepsilon = 1 \\ \eta^3/6, & \varepsilon = 0 \\ \operatorname{Senh}\eta - \eta, & \varepsilon = -1 \end{cases} \tag{II.63}$$

The interior of the star, $\bar{r} \leq \bar{r}_o$, is a 3-dimensional space of constant

curvature (positive, zero or negative curvature, depending on the value of ε) whose radius R depend on time (note that $\bar{r}$ is a coordinate, thus the coordinates of the surface are (τ, $\bar{r}_o$, θ, φ), while $\bar{r}_o R$ is the physical 3-dimensional radius of the star, i.e. a great circle on the surface has radius $\bar{r}_o R(\tau)$). Because of the time dependence of R, the star either expands or contracts (see Fig. 3(a)).

The solution in the exterior space is, as we have stablished, is the Schwarzschild solution; since the Tolman's solution holds for arbitrary mass density ρ , it must contain the exterior solution ($\rho = 0$) as a special case.

We have stated that the flow-lines of dust are geodesics, hence the dust particles on the collapsing surface moves along geodesics. The radial equation of geodesics, in Schwarzschild's metric take the form:

$$\dot{r}^2 = A + \frac{2M}{r} \quad , \quad A \neq A(r)$$

this must to coincide with Eq.(49), which represent geodesics in the metric (43):

$$\dot{r}^2 = -\varepsilon f^2 + \frac{F}{r}$$

comparing both geodesics at the boundary surface $\bar{r} = \bar{r}_o$ for all times τ , then

$$F = 2M \tag{II.64}$$

The necessary condition for join smoothly the interior and exterior solutions at the stellar boundary surface is, from Eq.(56):

$$r(\tau, \bar{r}_o) = \bar{r}_o R(\tau) \quad , \forall \tau \tag{II.65}$$

If we choose the origin of time in the exterior metric so that $\tau_o(\bar{r}_o) = 0$, then for $\varepsilon \neq 0$ (and from Eq.(53) we can arrive to the same conclusion for the case $\varepsilon = 0$) we can put r from Eq.(52) and R from Eq.(63) into Eq.(65) to obtain:

$$6M = 8\pi \rho \bar{r}_o^3 R^3(\tau) \tag{II.66}$$

where we have used $f(\bar{r}_o) = \bar{r}_o$, according to Eq.(60). Thus, if Eq.(66) is satisfied, then the metric is continuous on the surface of junction and the extrinsic curvature is continuous on the surface too, as can be directly verified. That is, the conditions of the above proposition are satisfied then it applies, and we can

conclude that the curvature tensor, expressed in the comoving coordinate system (τ , $\bar{r}$, θ , φ) used above is continuous on the junction hypersurface which separes the interior to the exterior spaces.

The mass M used in Eq.(64) is just the mass m that we associate with the source of the Schwarzschild exterior solution in the Newtonian gravitational theory (2M is the Scharzschild radius), i.e.:

$$m = M = \frac{4\pi\rho r_0^3}{3} \qquad \text{(II.67)}$$

Conclusion.- The solution found here shows that in the interior and exterior of the star no singularities occur when the stellar surface $\bar{r} = \bar{r}_0$ lies inside the Scharzschild radius 2M, only at $R(\tau) = 0$ does the interior field become singular.

III. QUANTUM FIELD THEORY IN CURVED SPACETIME

a) INTRODUCTION

In the last fifteen years great effort has been done in the construction of a unified theory of the forces of nature. With the Weinberg-Salam theory |49-50| the electromagnetic and weak interactions forces have received a unified description, and on the other hand Grand Unified Theories (GUT) incorporates the strong interaction and describe it in the frame of Quantum Chromodynamics |51|. But gravity resists till now to be putted in a Quantum framework. "Until now, a completely satisfactory quantum theory of gravity has been not achieved, although the quantization of the gravitational field has been pursued with great ingenuity and vigour over the past forty years" |53|.

In this frame, what can we say about the influence of the gravitational field on quantum phenomena? The problem with gravity is not the first of this type. In the early days of quantum mechanics, the electromagnetic theory causes the same troubles. In this case, the electromagnetic field was considered as a classical background field interacting with quantized matter. Such approximation, called "semiclassical", concords completely (for low frecuencies) with quantum electrodynamics. For this reason we shall consider the gravitational field as a classical background, while the matter fields are quantized in the usual way, as we have said in Chapter I.

Max Planck (1858-1947) in 1913 showed that the constants G, c, and h can be combined in a unique way to give natural (fundamental) units of length, time and mass. The "Planck length" is: $(G\,h/c^3)^{1/2} = 1.616\ 10^{-33}$cm, the "Planck time" is: $(G\,h/c^5)^{1/2} = 5.39\ 10^{-44}$s, and the "Planck mass" is: $(h\,c/G)^{1/2} = 2\ 10^{-5}$gr. This definotions are important because they mark the frontier at which a theory of quantum gravity is applicable: if length and time scales of quantum processes are less

than these values, we need a non-perturbative theory because in this case the concept of small perturbations break down; and if the length and time scales of quantum processes are much greater than the Planck values then we invoke a semi-classical theory.

But, according to what was said in Chapter II, one of the most importat features of gravitation is its universality, i.e. all form of matter and energy couple equally to gravity. This to say that in any case we cann't ignore gravity. However, so long as we remain for away from Planck dimensions the "semiclassical approximation" should work.

Important gravitational effects occur in quantum field modes for which the wavelength λ ($\sim 10^{-13}$ cm) is comparable with some characteristic length, for example the radius of the black hole. But, λ of such size is only available for micro-black holes, which have a mass $M < 10^{15}$ gr, and in the earliest epochs of the big-bang.

One of the most important features of Hawking's result on particle creation is that it establishes a strong connection between black holes and thermodynamics |55|; and ultimately the suspection is that there is a strong relation between black holes and solitons |56|.

Direct investigations of particle creation effects in a background gravitational field really began in the late 1960's with Parker (see also Sexl & Urbantke, 1969 |57|), followed by the investigations of Zel'dovich and collaborators. In the mid-seventies some techniques involving renormalization were developed for computing $\langle T^{\mu\nu} \rangle$ because is formally infinite. "An essential feature of these techniques is that they all yield a covariantly conserved (i.e. divergenceless) $\langle T^{\mu\nu} \rangle_{,\nu} = 0$ which is therefore a suitable candidate for the right hand side of a "semiclassical" Einstein equation" (i.e. $R_{\mu\nu} - \frac{1}{2} g_{\mu\nu} R = 8\pi \langle T_{\mu\nu} \rangle$)|53|.

Is $\langle T^{\mu\nu} \rangle_{,\nu} = 0$ compatible with particle creation? Hawking |58| showed that a conserved $\langle T^{\mu\nu} \rangle$, subject to the dominant energy condition (basically that energy and pressure should always remain positive |4|) was incompatible with particle creation. However, since spacetime curvature can induce negative stress-energy momentum in the vacuum, the dominant energy condition is violated |59|, then

Hawking's conclusion cannot be followed. Thus, particle creation is compatible with a conserved $\langle T_{\mu\nu} \rangle$.

In this Chapter we shall discuss the quantum field theory of a real scalar field in a curved but flat spacetime outside a compact region. We are led to a unique quantum scattering theory which is completely well behaved mathematically provided that a certain condition is satisfied by the operators which describe the scattering of classical positive frecuency solutions. In terms of these operators we derive the expression for the state vector describing particle creation from the vacuum state, afterwards we arrive to the S-matrix which is unitary, as should be. We consider the case when a horizon is absent and the case when it is present. In the later case we will get the state vector Ψ describing the steady state emission at late times for particle creation during and after gravitational collapse of a star which settles down to a stationary Schwarzschild black hole |54,60|. In this treatise we shall not consider the part of the spacetime corresponding to the interior of the star because as have been showed by Birrel and Davies |53|, consider the part of the metric inside of the star is irrelevant for the steady state flux of particles at $\mathcal{I}^+$ at late times. The density matrix formed from Ψ , describing emission of particles to $\mathcal{I}^+$, by the Hawking's particle creation effect |54, 83| was found by Wald |60| to be very similar to that one of black body emission. Thus, black hole emission looks like a black body emission at temperature $k\,T=\hbar\kappa/2\pi$.

Hawking and Wald used the semiclassical approximation. It seems reasonable that this semiclassical analysis of particle creation by gravitational collapse at very least give a good indication of the type of effect which will occur in an exact quantum treatment. Since the full information is contained in the vector state Ψ, the treatment which we will follow will permit to extract many properties of the final state of the quantized field, between them the expected number of emitted particles to infinite $\langle N \rangle$ (first calculated by Hawking, with and without spherical symmetry gravitational collapse, for particles emitted in each mode at late times) and the density matrix $\mathcal{D}$.

In the attempt to construct a complete description of the quantum mechanical particle creation effect from vacuum state (and the subsequent gravitational

cattering process) by obtaining the explicit expression for the vector state, we follow the approachs given in |60,61,54|.

Our assumptions are:

(A) The gravitational collapse is spherically symmetric.

(B) The spacetime is flat outside of a compact spacetime region, i.e. the curvature of the spacetime has compact support.

(C) The spacetime is globally hyperbolic and C^{∞} |4|.

(D) The states of the quantum field are characterized as particle states (i.e.vectors in the Fock space), both in the distant past ("in states") and distant future ("out states"). The quantum field operator is assumed in the distant past (future) to reduce to the standard free-field expression in terms of the "in" ("out") annihilation and creation Fock space operators. At early times the quantized field is assumed in the vacuum state.

Remark.- To define "in" and "out" states in quantum field theory in curved spacetime we need a notion of "positive frequency" in the asymptotic past and future. Since we are assuming (B), the spacetime becomes flat in the past and in the future, thus we can define the "past positive frequency" part of a solution by looking at its data on a Cauchy surface in the flat region in the past and decomposing it by the flat spacetime formula. The "future positive frequency" is well defined at future null infinity $\mathscr{I}^+$ since one has an asymptotic time translation parameter defined there, with respect to which we can take Fourier transforms.

Condition (A) is taken for simplicity, conditions (B) and (D) in order to have a mathematically well behaved scattering theory. Condition (C) guarantees the existence and unicity for the global Cauchy problem. A globally-hyperbolic spacetime is one for which there exists a global time coordinate t such that the equal-time surfaces $t \times \mathcal{C}$ (where $\mathcal{C}$ is a 3-dimensional manifold) are Cauchy surfaces. Topologically, such spacetimes are then necessarily of the form $R \times \mathcal{C}$ |62,63|.

b) QUANTUM FIELD THEORY IN MINKOWSKI SPACETIME

Consider a free real scalar field ϕ coupled to a Minkowski spacetime. In the quantum theory of this field, the Hilbert space of states should have par-

ticle interpretations. We would like that the quantized scalar field be a self-adjoint operator on this Hilbert space, satisfying the corresponding wave equation:

$$(\Box_M + m^2)\,\phi(x) = 0 \qquad \text{(III.1)}$$

where $\Box_M \equiv \eta^{\mu\nu}\partial_\mu\partial_\nu$, $\eta^{\mu\nu}$ is the Minkowskian metric tensor, the subscript M refers this situation. However, as is well known the attempt to define ϕ for each point x in Minkowski spacetime runs into serious mathematical dificulties (even for a free field, the expression obtainable for the field operator does not make mathematical sense as an operator defined at each spacetime point due to the fact that the field cannot be measured at a single point, only averages of the field over spacetimes regions are physically well defined). There are overcome by "smearing" ϕ with C^∞ test functions of compact support f, thus making ϕ an operator valued distribution $\phi(f)$ |64-66|. Thus, instead of Eq.(1) we require:

$$\phi(\Theta) = 0 \qquad \text{(III.2)}$$

for all Θ of the form

$$\Theta = (\Box_M + m^2)\,f \qquad \text{(III.3)}$$

where f is a test function |60|.

We take the Hilbert space of one particle states $\mathcal{H} = L^2(M_+)$ where M_+ is the positive mass shell (i.e. M_+ is the submanifold of Fourier transformed Minkowski spacetime defined by $k^\nu k_\nu + m^2 = 0$, with k^ν future directed). The Hilbert space of states is taken to be the symmetric Fock space $\mathcal{F}(\mathcal{H})$ defined by:

$$\mathcal{F}(\mathcal{H}) = \mathbb{C} \oplus \mathcal{H} \oplus (\mathcal{H}\otimes\mathcal{H})_s \oplus (\mathcal{H}\otimes\mathcal{H}\otimes\mathcal{H})_s \oplus \dots$$

where the subscript s denotes the symmetric tensor product.

The dual (complex conjugate) Hilbert space will be denoted by $\overline{\mathcal{H}}$. Thus, if $\Phi \in \mathcal{F}(\mathcal{H})$, it will be written:

$$\Phi = (c, \xi^a, \xi^{ab}, \xi^{abc}, \dots) \qquad \text{(III.4)}$$

where $c \in \mathbb{C}$, $\xi \in \mathcal{H}$, $\xi^{ab} \in (\mathcal{H}\otimes\mathcal{H})_s$, etc. An element of $\overline{\mathcal{H}}$ will be denoted: $\overline{\xi}_a \in \overline{\mathcal{H}}$. Because $\mathcal{H}$ and $\overline{\mathcal{H}}$ are naturally isomorphic, for every $\overline{\xi}_a \in \overline{\mathcal{H}}$, exists a unique

$\sigma^a \in \mathcal{H}$. Thus, a contraction of indices, e.g. $\xi^a \bar{\sigma}_a$ will denote the complex number obtained by applying $\bar{\sigma}_a$ to ξ^a |39|, and is the same as the scalar product of σ^a and ξ^a.

For every element $\bar{\tau} \in \bar{\mathcal{H}}$ (for simplicity we denote $\bar{\tau}_a$ by $\bar{\tau}$ and σ^a by σ), we define the annihilation operator $a(\bar{\tau}): \mathcal{F}(\mathcal{H}) \longrightarrow \mathcal{F}(\mathcal{H})$ as follows: for every $\Phi \in \mathcal{F}(\mathcal{H})$ we have

$$a(\bar{\tau})\,\Phi = (\xi^a \bar{\tau}_a, \sqrt{2}\,\xi^{ab}\bar{\tau}_a, \sqrt{3}\,\xi^{abc}\bar{\tau}_a, \ldots) \qquad \text{(III.5)}$$

Similarly, for every $\sigma \in \mathcal{H}$ we define the creation operator $a^+(\sigma): \mathcal{F}(\mathcal{H}) \longrightarrow \mathcal{F}(\mathcal{H})$ by the rule:

$$a^+(\sigma)\,\Phi = (0, c\,\sigma^a, \sqrt{2}\,\sigma^{(a}\xi^{b)}, \sqrt{3}\,\sigma^{(a}\xi^{bc)}, \ldots) \qquad \text{(III.6)}$$

where the round brackets around the indices denotes the symmetrized tensor product. Then $a^+(\sigma)$ is indeed the adjoint of $a(\bar{\sigma})$. Of course, $a(\bar{\sigma})$ and $a^+(\sigma)$ are unbounded operators, defined only on a dense domain.

It will be useful to establish some correspondences between solutions of the classical Klein-Gordon Eq.(1), states in $\mathcal{H}$ and test functions. Let F and G be two solutions of the Eq.(1). The Klein-Gordon scalar product of F and G is defined by:

$$(F, G)_{KG} = i \int_{\Sigma} (\bar{F}\,\partial_\mu G - G\,\partial_\mu \bar{F})\, d\Sigma^\mu \qquad \text{(III.7)}$$

where Σ is an asymptotically flat spacelike hypersurface. This scalar product is positive definite on the space of positive frequencies solutions. We note the following correspondences:

1) Every positive frequency solution F of finite Klein-Gordon norm is associated in a one-to-one linear manner with an element σ_F of $\mathcal{H}$ via:

$$\hat{F} = \sigma_F(k^\mu)\,\delta(k^\mu k_\mu + m^2) \qquad \text{(III.8)}$$

where $\hat{}$ means Fourier transform. Furthermore

$$(F, G)_{KG} = (\sigma_F, \sigma_G) \qquad \text{(III.9)}$$

where (σ_F, σ_G) means the scalar product in Hilbert space $\mathcal{H}$.

2) Similarly, every negative frequency solution $\bar{F}$ of finite Klein-Gordon norm is

associated in a one-to-one linear manner with an element $\bar{\sigma}_F \in \mathcal{H}$:

$$\hat{\bar{F}}(k^\mu) = \bar{\sigma}_F(k^\mu)\,\delta(k^\nu k_\nu + m^2) \qquad \text{(III.10)}$$

Furthermore:

$$(\bar{F}, \bar{G})_{KG} = -(\bar{\sigma}_F, \bar{\sigma}_G) = -(\sigma_G, \sigma_F) \qquad \text{(III.11)}$$

where ($\bar{\sigma}_F$, $\bar{\sigma}_G$) denotes the scalar product in $\bar{\mathcal{H}}$.

3) To every test function f we can linearly associate an element $\sigma_f \in \mathcal{H}$ by Fourier transforming f and restricting $\hat{f}$ to the positive mass shell to get an element of $L^2(M_+)$.

Finally we define the field operator $\phi(f)$: $\mathcal{F}(\mathcal{H}) \longrightarrow \mathcal{F}(\mathcal{H})$. For every test function f we define:

$$\phi(f) = a(\bar{\sigma}_f) + a^+(\sigma_f) \qquad \text{(III.12)}$$

afterwards, the discussion of the free field is complete. We must observe that Eq.(1) can be writted in a more familiar (though less elegant) form as follows. Let $\{\sigma_i\}$ be an orthonormal basis of $\mathcal{H}$ and let $\{F_i\}$ be a complete orthonormal set of positive frequency solutions ($\{\bar{F}_i\}$ being the negative frequency solutions) of the Klein-Gordon equation (1). Writting $a_i = a(\bar{\sigma}_i)$ and $a_i^+ = a^+(\sigma_i)$, then

$$\phi(x) = \sum_i \left(F_i(x)\, a_i + \bar{F}_i(x)\, a_i^+ \right) \qquad \text{(III.13)}$$

The F_i and $\bar{F}_i$, also called "mode solutions" |53|, satisfy:

$$(F_i, F_j)_{KG} = -(\bar{F}_i, \bar{F}_j)_{KG} = \delta_{ij} \;;\; (F_i, \bar{F}_j)_{KG} = 0 \qquad \text{(III.14)}$$

i.e. they are orthonormal. The meaning of Eq.(13) is to be understood as follows:

$$\phi(f) = a\left(\sum_i \bar{\sigma}_i \int F_i f\right) + a^+\left(\sum_i \sigma_i \int \bar{F}_i f\right) \qquad \text{(III.15)}$$

for every test function f and where the integrals are taken over Minkowski space.

Seiler |67| treated the quantum theory in flat spacetime of spin zero and spin one half fields coupled with an external potential V. This approach serves us to construct the quantum theory in curved spacetime, because in some sense curvature acts as a potential in a flat spacetime.

c) QUANTUM FIELD THEORY IN CURVED SPACETIME WITHOUT HORIZON

Consider now the real scalar field ϕ coupled to the gravitational field of th curved spacetime via the operator $\Box \equiv g^{\mu\nu}\nabla_\mu\nabla_\nu = (-g)^{-1/2}\partial_\mu[(-g)^{1/2}g^{\mu\nu}\partial_\nu]$, and such that ϕ satisfy the corresponding wave equation:

$$(\Box + m^2)\,\phi(x) = 0 \qquad \text{(III.16)}$$

Every field ϕ , has two parameters: the spin-weight s and the mass m |68|. Thus, we are dealing with mass scalar field (m,s=0), but we can extend many of our results to the massless scalar field (0,0), neutrino field (0,½), electromagnetic field (0,1) and graviton field (0,2).

We assune that conditions A,B,C, and D are valids; thus our spacetime is flat outside a compact spacetime region. The Klein-Gordon inner product is now defined as in Eq.(7) but with the covariant derivative ∇_μ instead of ∂_μ . One can show that the value of this inner product is independent of Σ ; using the Gauss's theorem |6,§2.7|.

By analogy with the free field case, we want a theory where ϕ is an operator valued distribution $\phi(f)$, acting on some Hilbert space of states $\mathcal{F}_c(\mathcal{H})$(the subscript c means that now we are dealing with a curved spacetime). Now we formalize assumption D : we require there to be an isomorphism (i.e. a unitary map) $U: \mathcal{F}_c(\mathcal{H}) \longrightarrow \mathcal{F}_{IN}(\mathcal{H}_{IN})$, where $\mathcal{F}_{IN}(\mathcal{H}_{IN})$ (and afterwards $\mathcal{F}_{OUT}(\mathcal{H}_{OUT})$) is a copy of the free field Hilbert space defined before and, $\mathcal{H}_{IN}$ and $\mathcal{H}_{OUT}$ are the Minkowski single particle Hilbert space (defined in section b) also) isomorphic one to the other but taken for convenience as distinct spaces; such that for every test function f with compact support in the distant past we have:

$$U\phi(f)U^{-1} = \phi_{IN}(f) = a(\bar{\sigma}_f) + a^+(\sigma_f) \qquad \text{(III.17)}$$

where the field operator $\phi(f): \mathcal{F}_c(\mathcal{H}) \longrightarrow \mathcal{F}_c(\mathcal{H})$and the free field operator $\phi_{IN}(f): \mathcal{F}_{IN}(\mathcal{H}_{IN}) \longrightarrow \mathcal{F}_{IN}(\mathcal{H}_{IN})$; and we denoted the annihilation and creation operators on $\mathcal{F}_{IN}(\mathcal{H}_{IN})$by a and a^+ . Similarly, we require there to be another isomorphism $W: \mathcal{F}_c(\mathcal{H}) \longrightarrow \mathcal{F}_{OUT}(\mathcal{H}_{OUT})$, such that for every test function f with compact support in the distant future, we have:

$$W\,\phi(f)\,W^{-1} = \phi_{OUT}(f) = b(\bar{\sigma}_f) + b^{+}(\sigma_f) \qquad \text{(III.18)}$$

where the field operator $\phi_{OUT}(f): \mathcal{F}_{OUT}(\mathcal{H}_{OUT}) \longrightarrow \mathcal{F}_{OUT}(\mathcal{H}_{OUT})$, and we denote the annihilation and creation operators on $\mathcal{F}_{OUT}(\mathcal{H}_{OUT})$ by b and b^{+}.

Remark.- For spacetimes which are only asymptotically flat, for massless fields, we can perform the decomposition of the positive frequency at past null infinity $\mathcal{J}^{-}$, provided that $\mathcal{J}^{-}$ is a good initial data surface for the field |69|. Similar asymptotic prescriptions will also undoubtedly work for massive fields (except that now non-zero rest mass particles does not arrive to $\mathcal{J}^{+}$ and $\mathcal{J}^{-}$, we will return to this point later) if the curvature is required to fall off sufficiently rapidly in the past. However we have a useful proposition which generalizes the mathematical construction of this section to cases with any definition of "past positive frequency" |61|:

Proposition.- Provided that :

(a) the Klein-Gordon inner product is positive definite on the subspace of past positive frequency solutions,

(b) any solution of Eq.(16) with initial data of compact support can be expressed as the sum of a past positive frequency solution and the complex conjugate of a past positive frequency solution (≡ a negative frequency solution), both of which have finite Klein-Gordon norm,

(c) each negative frequency solution has vanishing Klein-Gordon inner product with any positive frequency solution, i.e. $(F,\bar{G})_{KG} = 0$, F is any positive frequency solution of Eq.(16) and $\bar{G}$ is any negative frequency solution,

(d) the past positive frequency solutions obtained by decomposing solutions with data of compact support are dense in the Hilbert space of all past positive frequency solutions;

then the results of this section will work with any definition of "past positive frequency".

Given the notion of "past positive frequency", the one-particle "in" Hilbert space $\mathcal{H}_{IN}$ is taken to be the past positive frequency solutions with finite Klein-Gordon norm. The Klein-Gordon inner product is positive definite on the spa-

ce of positive frequency solutions. Denoting $\mathcal{F}_{\substack{IN\\OUT}}(\mathcal{H}_{\substack{IN\\OUT}}) \equiv \mathcal{F}_{\substack{IN\\OUT}}(\mathcal{H})$, the states $\mathcal{F}_{IN}(\mathcal{H})$ and $\mathcal{F}_{OUT}(\mathcal{H})$ are interpreted respectively as the incoming and outgoing particle states.

The scattering matrix or S-matrix yields the relation between these two ways of characterize the states, i.e. "in" states and "out" states (see Fig. 4). The S-matrix is defined as the field operator $S : \mathcal{F}_{IN}(\mathcal{H}) \longrightarrow \mathcal{F}_{OUT}(\mathcal{H})$, $S \equiv W\,U^{-1}$.

Our task is now to solve explicitly, for ψ , the equation:

$$\psi = S\,\psi_0 \qquad \text{(III.19)}$$

where $\psi_0 \in \mathcal{F}_{IN}(\mathcal{H})$ is the in-vacuum state and $\psi \in \mathcal{F}_{OUT}(\mathcal{H})$ is the out-state. From the definition of S, and using Eqs.(17)-(18) (for details see |60|) we obtain:

$$S\,a(F)\,S^{-1} = b(C\sigma) - b^{+}(\bar{D}\sigma) \qquad \text{(III.20)}$$

where the operators C and D are defined as follows. Let $\sigma \in \mathcal{H}_{IN}$ and let σ_ξ be the solution of Eq.(16) which coincides with some solution F of Eq.(1) in the future. Let π be the positive frequency part of F , and let η be the negative frecuency part of F . We may view π as an element of $\mathcal{H}_{OUT}$ and η as an element of $\bar{\mathcal{H}}_{OUT}$. Then we define: $C\sigma = \pi$ and $D\sigma = \eta$.

<u>Definition</u>.- We define the operator E : $\bar{\mathcal{H}}_{OUT} \longrightarrow \mathcal{H}_{OUT}$, as the complex conjugate of the operator DC^{-1}, i.e. $E = \bar{D}\,\bar{C}^{-1}$.

<u>Remark</u>.- This operator is very important, as we will see, between other things it will tell us the negative frequency part that a wave packet pick up when it is propagated through a collapsing star.

The operator E satisfies the following properties |60,61,64|:

(i) the operator E is symmetric, i.e. $E^{+} = \bar{E}$,

(ii) $tr(E^{+}E) < \infty$, i.e. E is a Hilbert-Schmidt operator.

A consecuence of the fact that E satisfies this two properties, is that we can construct quantum field theory which satisfy our requirements; otherwise our goal could not be achieved.

Applying both sides of Eq.(20) to ψ , and using Eq.(19), we can solve it for ψ and find an important result: particles are created only in pairs. The

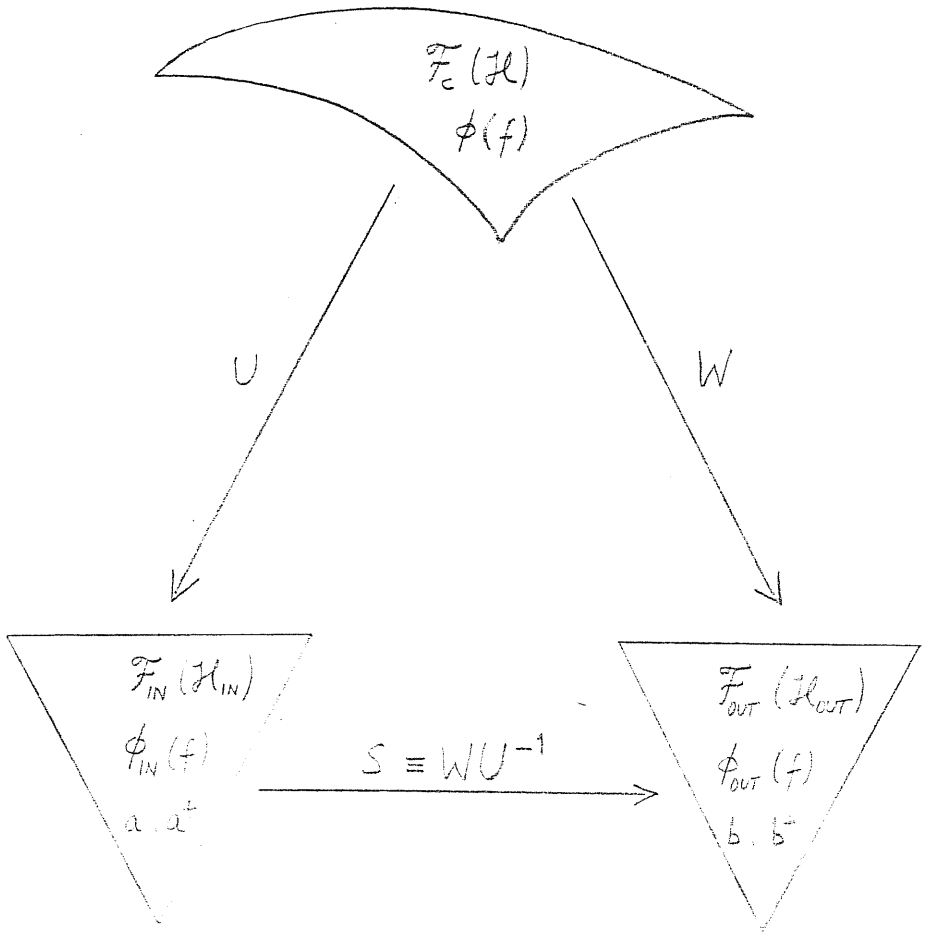

Fig. 4. Relationships between the Hilbert space of states $\mathcal{F}_c(\mathcal{H})$ and the Hilbert spaces of states in the asymptotic regions. The S-matrix just relates this "in" and "out" regions.

solution of this equation is unique up to a phase factor.

The covariant quantization of the theory is implemented by adopting the commutation relations:

$$[a(\bar{\sigma}), a^{+}(\rho)] = (\sigma, \rho) I \quad , \qquad [a(\bar{\sigma}), a(\bar{\tau})] = [a^{+}(\sigma), a^{+}(\tau)] = 0$$

These relations are useful in the proof of the following

Proposition.- If condition B is assumed, then property (ii) above is satisfied. Then the S-matrix exist and it is unitary.

Remark.- What this proposition tells is that the sufficient condition (and also a necessary one if the operators describing classical scattering are everywhere defined) for the existence of the S-matrix is just property (ii). For a rigorous proof, see |60-61|.

Geroch |69| propose an example of a asymptotically flat spacetime, well behaved globally, which however admits a nonzero field (a Maxwell field), with zero source having zero incoming radiation from past null infinity $\mathscr{I}^{-}$. The resulting "particle creation" uncontrollable from null infinity, would make ambiguous the S operator. Thus, in order to avoid physical situations under which fields could enter the spacetime without their having been recorded asymptotically, hence giving a bad behaved scattering theory, we must to strengthen our assumptions, requiring that "every maximally extended past directed null geodesic reach past null infinity" |69|. Unfortunatelly, this condition eliminates other patological spacetimes, but the one mentioned above it does not.

Dimock and Kay |70| treated the massive scalar field (m,s=0) using a different approach, namely, the algebraic formulation. They construct a quantum scattering theory assuming that: (a) the spacetime is globally hyperbolic with surfaces x^{o}= const. as Cauchy surfaces, (b) the metric is asymptotically stationary (this condition is needed in order that the energy of the solutions is bounded in time), and (c) the metric becomes Minkowskian at space-like infinity or/and at time-like infinity. This method and his results can be generalized to other external field pro

blems. However, the results are only valid for the case $m \neq 0$. They do not deal with the horizon problem. Dimock |71|, following a general framework given by Wightman |72,73| in which the advanced and retarded fundamental solutions of the differential operator play a key role, treat the massive or massless ($m \geqslant 0$) scalar quantum field case in an external gravitational field. He also arrives to a well-behaved mathematically scattering theory. One step further was done by Kay |74,75|, with an algebraic approach, considering spin-zero quantum fields in an external gravitational field and in an external scalar field V (also called potential field); i.e. the equation considered was: $(\Box + m^2 + V)\phi = 0$. Fields which, apart to be coupled to an external gravitational field, are self-coupled are treated by Birrel and Ford |76|. These fields are a scalar and an electromagnetic ones. For a survey about the physics and mathematics of quantum field theory in curved spacetimes, see |77-82|.

Concluding this section we stress the importance of the following

Spin Statistics Theorem.- No reasonable quantum field theory in curved spacetime (or in an external potential) with symmetric statistics (i.e. the fact that in $\mathcal{F}(\mathcal{H})$ we have taken the symmetric tensor product of Hilbert spaces $\mathcal{H}$) exists, if the conserved inner product for c-number solutions is positive definite for all solutions.

d) QUANTUM FIELD THEORY IN CURVED SPACETIME WITH HORIZON

We must do some modifications to the precedings results in order to apply them to the problem of particle creation from vacuum, occurring when a spherical body undergoes complete gravitational collapse and forms a stationary black hole, one of his most important characteristics is to posses a horizon. In this sense this section can also be entitled: Particle creation by black holes. As have already mentioned, this was first treated by S. Hawking |83,54|, and thence it has attracted considerable interest, between other reasons by his potential applicability to astrophysics.

Again we assume that assumptions A,B,C and D are valids. Condition A, by Birkhoff's theorem, implies that the black hole formed by the collapse is a non-rotating (and we assume moreover that it is an uncharged) Schwarzschild black hole, this means that outside the horizon the spacetime is the Schwarzschild one. We do not consider the region of spacetime inside the collapsing star because it is irrelevant for our goals (see Fig. 5).

In this Schwarzschild spacetime, consider the quantum field theory of a massless real scalar field ϕ, which obeys the covariant wave equation

$$\Box \phi = 0 \qquad \text{(III.21)}$$

where: $\Box \equiv (-g)^{-1/2} \partial_\mu [(-g)^{1/2} g^{\mu\nu} \partial_\nu]$. The reason for consider a massless field is the following: solutions of Eq.(21) in the spacetime we are considering, are presumably determined (and we assume it) by their data at past null infinity $\mathcal{I}^-$ or by their data at future nullinfinity $\mathcal{I}^+$ and the future event horizon, while this is not true for massive fields |54,60|. This will allow us to speak in precise terms of the asymptotic behavior of the field. As discussed previously, the quantum theory should be such that the states of the quantum system are represesented by vectors in the Hilbert space $\mathcal{F}(\mathcal{U})$, and the field ϕ is represented by an operator-valued distribution $\phi(f)$, acting on this Hilbert space ($\phi(f): \mathcal{F}(\mathcal{U}) \longrightarrow \mathcal{F}(\mathcal{U})$) and satisfying Eq.(21). Moreover, in the distant past the states of the system should asymptotically "look like" states in the free field Hilbert space $\mathcal{F}_{IN}(\mathcal{U})$, and the field operator ϕ should approach the free field operator ϕ_{IN} .

The fact that ϕ satisfies Eq.(21) and agrees with ϕ_{IN} in the past, implies that ϕ takes the form:

$$U \phi U^{-1} = \Sigma (G_i a_i + \bar{G}_i a_i^+) \qquad \text{(III.22)}$$

where $a_i \equiv a(\bar{\sigma}_i)$, $a_i^+ \equiv a^+(\sigma_i)$, and where the meaning of this equation is to be understood in the same way as Eq.(13); where G_i are the solutions of Eq.(21) which agrees in the past ($\mathcal{I}^-$) with the free field solution F_i, appearing in Eq.(13).

However, in the asymptotic future the situation is different from that of the section c). When no horizon is present all classical wave solutions of Eq.(21)

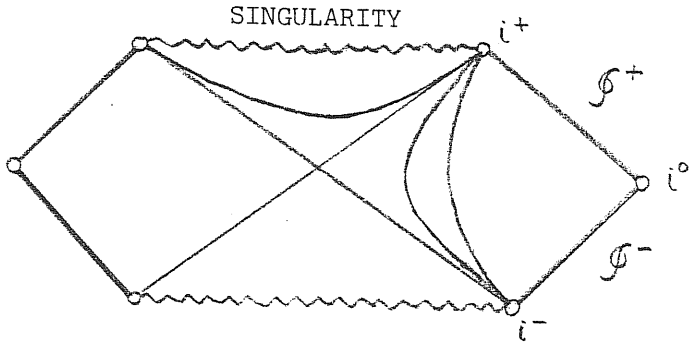

Fig. 5(a). Penrose diagram for the analitically extended Schwarzschild sol.

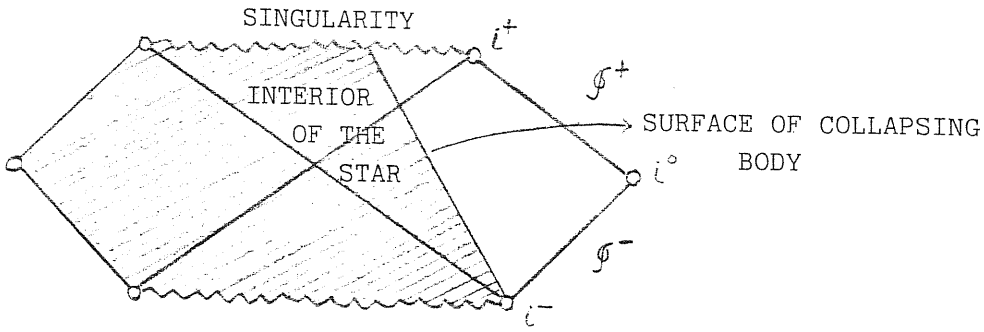

Fig. 5(b). Only the region outside the collapsing body is relevant for a black hole formed by gravitational collapse.

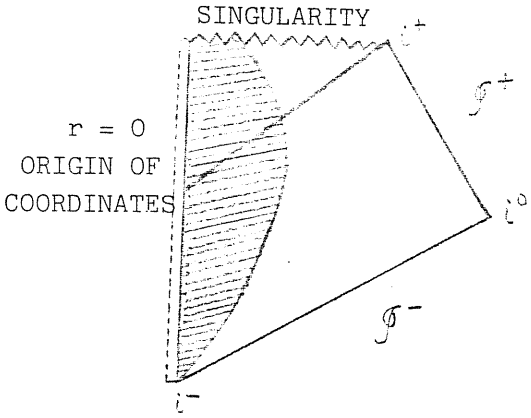

Fig. 5(c). Penrose diagram. Now the vertical dotted line represents the non-singular centre of the collapsing body.

Fig. 5. Diagrams |54|.

propagate out to the future null infinity and in quantum theory it is natural to assume that in the asymptotic future all states can be interpreted as free particles propagating out to infinity. However when a horizon is present (and we would expect that a collapsing star which gets a black hole, would develop an event horizon |84| which justly hide from us the black hole), part of the classical waves can propagate into the black hole and never reach future null infinity. Hence, in this case it seems most natural to assume that states of the system have interpretations in terms of free particles at infinity and particles which have gone into the black hole. This suggests that the "out" Hilbert space in this case should be $\mathcal{F}_{out}(\mathcal{H} \oplus \mathcal{H}')$, where $\mathcal{H}$ is the usual single particle free field Hilbert space ("particles at infinity") and $\mathcal{H}'$ is the single particle Hilbert space of particles which have entered the black hole; i.e. the "out" Hilbert space should be the symmetric Fock space of the Hilbert space of all possible one-particle states.

We must use basis solutions that distinguish the positive frequency solutions from the negative ones. Such a distinction can be made only if the concepts of positive and negative frequency have meaning in the spacetime under consideration. For these notions to have meaning the geometry must be stationary (i.e. independent of t), or in other language, spacetime must possess a global timelike Killing vector field. It may not admit the Poincaré group but it must admit at least a one parameter group of timelike motions. In the case of a static, vacuum Schwarzschild black hole (i.e. one not created by gravitational collapse) there is a time translation parameter v running along the future horizon, thus enabling one to define unambiguously positive (and negative) frequencies on the horizon. However, in the case of a black hole formed by gravitational collapse (our case), can happen two situations:

(a) if the collapse is spherically symmetric, then the horizon is the static Schwarzschild horizon only outside of the collapsing matter, and

(b) if the collapse is a generic one, then the horizon is only asymptotically stationary.

Since we are assuming condition A, we are dealing with situation (a) above and so

we do not have a time translation vector defined everywhere on the future horizon. This results in ambiguity in the definition of positive frequency. However, as a work hypothesis, we take the following definition of positive frequency |60| (see also |54|):

Definition.- Choose a set of solutions $\{K_i\}$ of Eq.(21) which vanish at $\mathcal{J}^+$, which are orthonormal (with positive norm) in the Klein-Gordon scalar product, and are such that the $\{K_i\}$ and their complex conjugates $\{\bar{K}_i\}$ span all solutions which vanish at $\mathcal{J}^+$. A solution of Eq.(21) will be called "positive frequency at the horizon" if it can be expressed as a sum of the $\{K_i\}$ (without using their complex conjugates).

Due to the considerable ambiguity in the choice of the $\{K_i\}$, is useful and necessary to formulate the

Proposition.- All predictions of the theory with regard to measurements made at infinity must be (and actually are) independent of the definition of positive frequency at the future event horizon.

The term "positive frequency" is well defined at future null infinity $\mathcal{J}^+$, since one has an asymptotic time translation parameter u defined there with respect to which one can take Fourier transforms. Then, vectors in $\mathcal{H}$ can be put into one-to-one correspondence with positive frequency data for classical solutions of Eq. (21) at future null infinity, and then it is natural to associate $\mathcal{H}'$ with positive frecuency data for classical solutions of Eq.(21) at the horizon.

So, according to the above arguments, it is natural to postulate that the field operator ϕ, when brought to the "out" Hilbert space $\mathcal{F}_{out}$ by the isomorphism W, will take the form (classical solution means free solution or sol. of Eq.(1)):

$$W\phi W^{-1} = \sum_i \left(H_i b_i + \bar{H}_i b_i^+ + K_i c_i + \bar{K}_i c_i^+ \right) \quad \text{(III.23)}$$

where H_i is the solution of Eq.(21) with the same data at $\mathcal{J}^+$ as the free field solution F_i and vanishing data on the horizon, and where c_i and c_i^+ are the annihilation and creation operators for the state in $\mathcal{H}'$ associated with the "positive frequency" solution K_i.

One is primarily interested in the results of measurements at infinity, thus, to describe them one constructs a density in the following manner:

The out Hilbert space $\mathcal{F}_{OUT}(\mathcal{H}\oplus\mathcal{H}')$ is naturally isomorphic to the Hilbert space $\mathcal{F}_{OUT}(\mathcal{H})\otimes\mathcal{F}_{OUT}(\mathcal{H}')$ as follows: let $\rho^{ab\ldots z}\in(\otimes_n\mathcal{H})_s$ and let $\sigma^{a'b'\ldots z'}\in(\otimes_m\mathcal{H}')_s$, i.e. $\rho^{ab\ldots z}$ is an n-particle "infinite state" and $\sigma^{a'b'\ldots z'}$ is an m-particle "horizon state". Thus, the natural isomorphism is:

$$\mathcal{F}_{OUT}(\mathcal{H}\oplus\mathcal{H}')\ni\rho^{(a\ldots z}\sigma^{a'\ldots z')}\longrightarrow\left(\frac{n!\,m!}{(n+m)!}\right)^{1/2}\rho^{a\ldots z}\otimes\sigma^{a'\ldots z'}\in\mathcal{F}_{OUT}(\mathcal{H})\otimes\mathcal{F}_{OUT}(\mathcal{H}') \quad \text{(III.24)}$$

This map is easily seen to be norm preserving on these vectors. Since the vector states $\rho^{(a\ldots z}\sigma^{a'\ldots z')}$, are dense in $\mathcal{F}_{OUT}(\mathcal{H}\oplus\mathcal{H}')$, whereas the vector states $\rho^{a\ldots z}\otimes\sigma^{a'\ldots z'}$, are dense in $\mathcal{F}_{OUT}(\mathcal{H})\otimes\mathcal{F}_{OUT}(\mathcal{H}')$, then we have indeed defined an isomorphism.

Let $\Phi\in\mathcal{F}_{OUT}(\mathcal{H}\oplus\mathcal{H}')$. To get the density matrix in $\mathcal{F}_{OUT}(\mathcal{H})$ associated with Φ we consider the state $\Phi\otimes\bar{\Phi}\in\mathcal{F}_{OUT}(\mathcal{H}\oplus\mathcal{H}')\otimes\overline{\mathcal{F}_{OUT}(\mathcal{H}\oplus\mathcal{H}')}$ and use the isomorphism given by Eq.(24) to view it as an element of $[\mathcal{F}_{OUT}(\mathcal{H})\otimes\mathcal{F}_{OUT}(\mathcal{H})]\otimes$ $\otimes[\mathcal{F}_{OUT}(\mathcal{H}')\otimes\mathcal{F}_{OUT}(\mathcal{H}')]$. One then takes the trace of this element with respect to a basis of $\mathcal{F}(\mathcal{H}')$ to get a vector in $\mathcal{F}_{OUT}(\mathcal{H})\otimes\overline{\mathcal{F}_{OUT}(\mathcal{H})}$, which one views as an operator $\mathcal{D}:\mathcal{F}_{OUT}(\mathcal{H})\longrightarrow\mathcal{F}_{OUT}(\mathcal{H})$, called the density matrix. If $\mathcal{A}:\mathcal{F}_{OUT}(\mathcal{H})\longrightarrow\mathcal{F}_{OUT}(\mathcal{H})$ is any observable on $\mathcal{F}_{OUT}(\mathcal{H})$, its expectation value is given by

$$\langle\mathcal{A}\rangle=\mathrm{tr}(\mathcal{A}\mathcal{D}) \quad \text{(III.25)}$$

so the density matrix $\mathcal{D}$ gives one complete information concerning the results of measurements at infinity. An important feature of the density matrix $\mathcal{D}$ is that for measurements at infinity it is indeed independent of the definition of positive frequency on the horizon.

Our aim now is to calculate explicitly the state $\psi\in\mathcal{F}_{OUT}(\mathcal{H}\oplus\mathcal{H}')$ which results when the complete gravitational collapse of a body occurs with no particles initially present, i.e. starting with the vacuum "in" state. The result, after solving Eq.(20) (using Eq.(19)), is |60|:

$$\psi=\psi(\varepsilon^{ab})=c\left(1,0,2^{-1/2}\varepsilon^{ab},0,((3.1)/(4.2))\varepsilon^{(ab}\varepsilon^{cd)},0,\ldots\right) \quad \text{(III.26)}$$

where $\mathcal{E}^{ab}$ is the 2-particle state associated with the operator E: $(\mathcal{H} \oplus \mathcal{H}') \longrightarrow (\mathcal{H} \oplus \mathcal{H}')$; now this operator E even satisfy the properties stablished above. Now we want to determine explicitly .

The first step is to introduce an orthonormal basis for $\mathcal{H}$ and an orthonormal basis for $\mathcal{H}'$ as follows: for each w, l, m, let P_{wlm} denote the solution generated by the data $w^{-1/2} \exp(iwu)\, Y_{lm}(\theta, \varphi)$ at future null infinite. Fix a real number Δ with: $0 < \Delta \ll 1$ and define:

$$P_{jnlm} = \Delta^{-1/2} \int_{j\Delta}^{(j+1)\Delta} \exp(-2\pi i n \omega/\Delta)\, P_{\omega lm}\, d\omega \qquad \text{(III.27)}$$

then the state $P_{jnlm} \in \mathcal{H}$, with $j \geqslant 0$ yield a basis for all solutions generated from positive frequency data on $\mathcal{J}^+$ and they are orthonormal in the Klein-Gordon inner product. The one-particle states P_{jnlm} represent wave packets made up of frequencies within Δ of $w = j\Delta$. They are peaked around the retarded time $u = 2\pi n/\Delta$ and have a time spread $\sim 2\pi/\Delta$. We denote ρ_i^a a typical element of the basis $\{P_{jnlm}\}$, where the index i stands for jnlm, instead the index a tell us that $\rho_i^a \in \mathcal{H}$.

For the vacuum Schwarzschild solution one can construct a similar basis $\{Q_{jnlm}\}$ for the horizon states $\mathcal{H}'$, by precisely the same procedure starting from the solutions Q_{wlm} generated by the data $w^{-1/2} \exp(iwv)\, Y_{lm}(\theta, \varphi)$ at the future horizon, v being the usual advanced time. For large n, i.e.for late times, the ambiguity in defining Q_{jnlm} resulting from the ambiguity in defining v will be negligible. We will use our freedom in choosing the elements of the positive frequency basis $\{K_i\}$ at the horizon so that the $\{Q_{jnlm}\}$ for large n form part of this basis. We will use the symbol σ_i^a for a basis element corresponding to Q_{jnlm}.

Now we construct late time basis elements of $\mathcal{H} \oplus \mathcal{H}'$. Let X_{jnlm} denote the solution generated by a prescribed data at the past event horizon and in a similar manner let Y_{jnlm} be the solution generated by a prescribed data at $\mathcal{J}^-$. Assuming that the transmission and reflection amplitudes $t = t_{lm}(w)$ and $r = r_{lm}(w)$ vary negligibly over the frequency interval Δ , we have:

$$X_{jnlm} = t\,P_{jnlm} + r\,Q_{jnlm} \qquad \text{(III.28)}$$

and

$$Y_{jnlm} = T\,Q_{jnlm} + R\,P_{jnlm} \qquad \text{(III.29)}$$

Using the basis elements (states), corresponding to each of these solutions, we have:

$$\lambda_i^a = t_i\,\rho_i^a + r_i\,\sigma_i^a \qquad \text{(III.30)}$$

and

$$\gamma_i^a = T_i\,\sigma_i^a + R_i\,\rho_i^a \qquad \text{(III.31)}$$

At late times (i.e. for large n), if we propagate the wave packet Y_{jnlm} corresponding to the state γ_i^a backward in time, it will be almost entirely scattered back to $\mathscr{I}^-$ by the static Schwarzschild geometry, hence it cannot pick up any negative frequency part and the resulting wave packet at $\mathscr{I}^-$ will be the purely positive frequency wave packet Y_{jnlm}.

On the other hand, at late times, the wave packet $tP+rQ$ corresponding to λ_i^a will be almost entirely scattered through the dynamically collapsing body and thence back to $\mathscr{I}^-$. The major effect which occurs is that the wave will suffer a very large blueshift upon entering the collapsing body (near the formation of the horizon, see Fig. 6). This blueshift will not be compensated by a correspondingly large redshift when the waves leaves the body since the body is in a less collapsed state at earlier times. Since the effective frequency of the wave is very high (wavelength very small) when it enters the collapsing body and propagates to $\mathscr{I}^-$, then the geometrical optics approximation will be valid in this regime. Almost all of this wave packet will reach $\mathscr{I}^-$ just prior to the advanced time v_0 corresponding to the formation of the event horizon (see Fig. 7). In fact, in the geometrical optics approximation it follows that the v dependence of the wave packet at $\mathscr{I}^-$ is given by:

$$Z_{jnlm}(v) \sim \begin{cases} 0 & , v > v_0 \\ \exp(-i\omega L/\Delta)\,\sin(L/z)/L & , v < v_0 \end{cases}$$

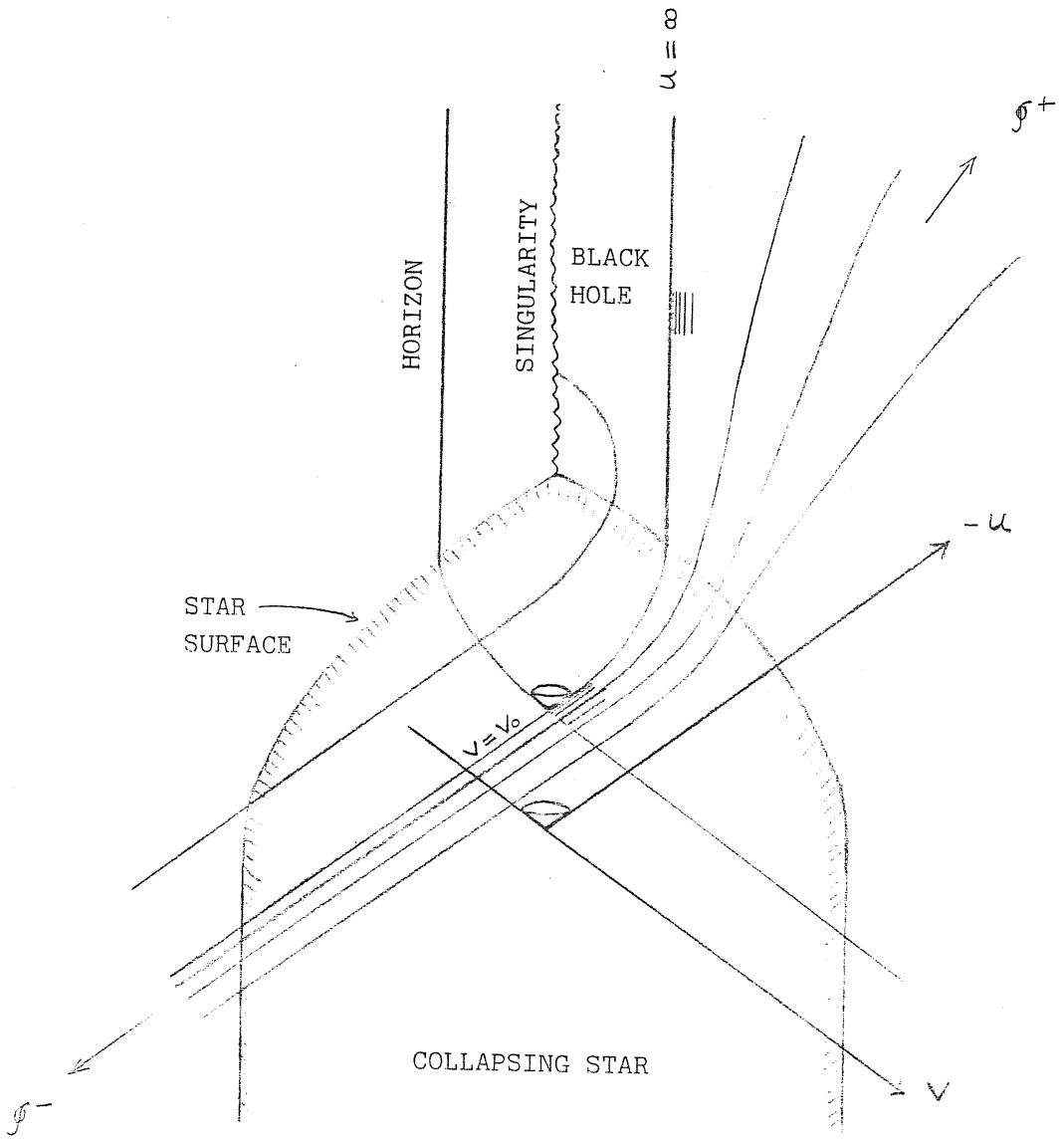

Fig. 6. As the star collapses to a singularity, null rays converging on the star's center are distorted. Rays which are equispaced along at late times, crowd up along v_0 and then suffer a large blueshift.

where $w = (j+\frac{1}{2})\Delta$ is the effective frequency of the original wave packet at $\mathcal{J}^+$ and the future horizon, and $L = 2\pi n + (\Delta/\kappa)\ln(v_0-v)$, where κ is the surface gravity of the black hole. Consider now the "time reflected" wave packet $\tilde{Z}_{jnlm}$ at $\mathcal{J}^-$ given by:

$$\tilde{Z}_{jnlm}(V) \sim \begin{cases} \exp(-i\omega\tilde{L}/\Delta)\,\mathrm{Sin}(\tilde{L}/2)/\tilde{L} & , V > V_0 \\ 0 & , V < V_0 \end{cases}$$

where $\tilde{L} = 2\pi n + (\Delta/\kappa)\ln(v-v_0)$. The $\{\tilde{Z}_{jnlm}\}$ are also orthonormal (because $\{Z_{jnlm}\}$ are orthonormal), but with negative unit norm since the time reflection changes the sign of the Klein-Gordon scalar product. Suppose now, we propagate the wave packet $\tilde{Z}_{jnlm}$ into the future; the geometrical optics approximation will be valid as this wave packet propagates toward the collapsing body since the effective frequency of $\tilde{Z}_{jnlm}$ is as high as Z_{jnlm}. The original wave packet Z_{jnlm} arrives at the center of the collapsing body just prior to the formation of the event horizon. However, the wave packet Z_{jnlm} arrives just after the formation of the horizon and in the geometrical optics approximation it propagates entirely into the black hole. Let J_{jnlm} denote the data for this wave packet at the future event horizon. We use our freedom in defining positive frequency at the horizon to take the set $\{\bar{J}_{jnlm}\}$ as part of our positive frequency basis $\{K_i\}$ (this is because the wave packets J_{jnlm} have negative Klein-Gordon norm). We shall denote by τ_i^a the horizon state associated with the wave packet $\bar{J}_{jnlm}$. To understand the role of λ_i^a, τ_i^a, Z_{jnlm} and $\tilde{Z}_{jnlm}$, look at the Fig. 7.b . Using the action of the operator $\bar{E}$ on the basis vectors, Wald |60| found the 2-particle state associated with this operator:

$$\varepsilon^{ab} = \sum_i \exp(-\pi\omega i/\kappa)\, 2\,\lambda_i^{(a}\tau_i^{b)} + \varepsilon_0^{ab} \qquad \text{(III.32)}$$

where ε_0^{ab} is orthogonal to all the late time basis vectors $\{\lambda_i^a\}$, $\{\gamma_i^a\}$ and the early time horizon states $\{\tau_i^a\}$. Physically ε_0^{ab} gives the pair creation part of ψ which reachs infinity at early times while the summed term gives the final steady state emission.

Eq.(32), together with Eq.(26) gives the solution for the state vector ψ which results from particle creation starting from the vacuum during gravitational collapse.

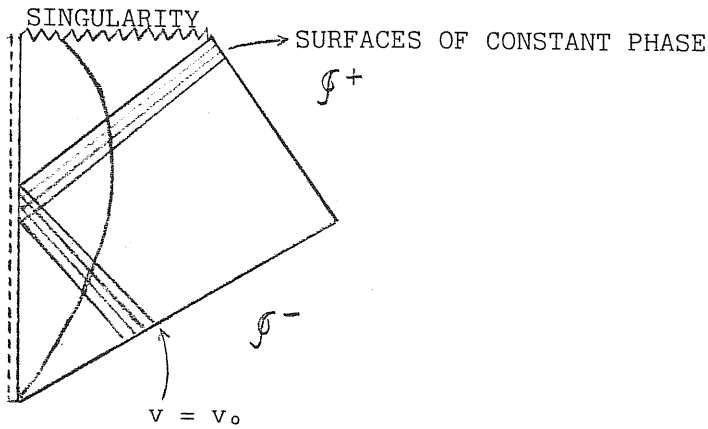

Fig. 7(a). The solution X_{jnlm} of the wave eq. has an infinite number of cycles near the horizon and near $v = v_0$.

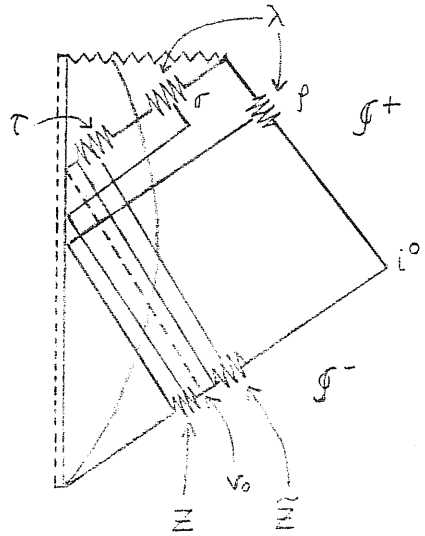

Fig. 7(b). Relationships between $\lambda_i^a, \tau_i^a, Z_{jnlm}, \tilde{Z}_{jnlm}$. When the wave packet corresponding to the state λ_i^a is propagated backward into the past, it gets scattered through the collapsing body and produces the data at $\mathscr{I}^-$. The data $\tilde{Z}_{jnlm}$ at $\mathscr{I}^-$ is the time reflection of Z_{jnlm} about v_0.

Fig. 7. Diagrams |60|.

According to the previous section, E must be a Hilbert-Schmidt operator in order that the theory were consistent, i.e. that ε^{ab} and $\psi(\varepsilon^{ab})$ be normalized states and hence that the theory make rigorous mathematical sense. But, it is clear from Eq.(32) that in this case ε^{ab} does not have finite norm since even for fixed j and m one has terms of finite norm (bounded away from zero) for infinitely many n and l (remember that the index i means jnlm). This infinity we get in the norm of ε^{ab} results from the steady rate of emission in all modes over all time. However, if we restrict attention to measurements of a finite number of modes, then in a well defined sense the infinite norm factor (due to the infinite of other modes) factors out and we can obtain well defined predictions.

The fact which permits us to reduce the state vector $\psi(\varepsilon^{ab})$ to a form where it can be easily interpreted is the following:

<u>Lemma</u>.- Let $\mathcal{H}_1$ and $\mathcal{H}_2$ be Hilbert spaces and let $\varphi^{ab} \in (\mathcal{H}_1 \otimes \mathcal{H}_1)_s$, $\eta^{ab} \in (\mathcal{H}_2 \otimes \mathcal{H}_2)$. Consider the state $\Phi(\mu^{ab}) \in \mathcal{F}(\mathcal{H}_1 \oplus \mathcal{H}_2)$ defined by

$$\Phi(\mu^{ab}) = (1, 0, 2^{-1/2}\mu^{ab}, 0, ((3.1)/4.2)^{1/2}\mu^{(ab}\mu^{cd)}, 0, \ldots) \qquad \text{(III.33)}$$

where $\mu^{ab} = \varphi^{ab} + \eta^{ab}$. Then under the natural isomorphism (Eq.(24)) between $\mathcal{F}(\mathcal{H}_1 \oplus \mathcal{H}_2)$ and $\mathcal{F}(\mathcal{H}_1) \otimes \mathcal{F}(\mathcal{H}_2)$ the state $\Phi(\mu^{ab})$ is mapped into the simple product state $\Phi_1(\varphi^{ab}) \otimes \Phi_2(\eta^{ab})$, where

$$\Phi_1(\varphi^{ab}) = (1, 0, 2^{-1/2}\varphi^{ab}, 0, (3.1/4.2)^{1/2}\varphi^{(ab}\varphi^{cd)}, 0, \ldots) \qquad \text{(III.34)}$$

$$\Phi_2(\eta^{ab}) = (1, 0, 2^{-1/2}\eta^{ab}, 0, (3.1/4.2)^{1/2}\eta^{(ab}\eta^{cd)}, 0, \ldots) \qquad \text{(III.35)}$$

Applying this lemma to our vector state $\psi(\varepsilon^{ab})$, setting $\mathcal{H}_1$ equal to the two dimensional Hilbert space generated by the vectors λ_i^a and τ_i^a and $\mathcal{H}_2 = (\mathcal{H}_1)^\perp$, we obtain:

$$\psi(\varepsilon^{ab}) = \psi_i(\exp(-\pi\omega_i/\kappa)2\lambda_i^{(a}\tau_i^{b)}) \otimes \psi(\tilde{\varepsilon}^{ab}) \qquad \text{(III.36)}$$

where

$$\psi_i(\exp(-\pi\omega_i/\kappa)2\lambda_i^{(a}\tau_i^{b)}) = (1, 0, 2^{-1/2}\exp(\cdot)2\lambda_i^{(a}\tau_i^{b)}, 0, \qquad \text{(III.37)}$$

$$, (3.1/4.2)^{1/2}\exp(-2\pi\omega_i/\kappa)4\lambda_i^{(a}\tau_i^{b}\lambda_i^{c}\tau_i^{d)}, \ldots)$$

and where $\tilde{\varepsilon}^{ab}$ is defined by the same Eq.(32) except that the single term $\exp(-\pi\omega_i/\kappa)\, z\, \lambda_i^{(a} \tau_i^{b)}$ is omitted in the sum.

Suppose that we are interested only in measuring emission in the i-th mode. Since the state vector $\psi(\varepsilon^{ab})$ is of the form of a simple product of a state vector $\psi_i(\cdot)$ for the i-th mode and a state vector for modes orthogonal to the i-th mode $\psi(\tilde{\varepsilon}^{ab})$, then the density matrix for emission in the i-th mode is the same as that of the pure state vector ψ_i. Thus, we have established the following

<u>Proposition</u>.- Emission in the various modes is independent, i.e. there are no correlations between measurements of particles emitted in different modes. Each mode has its own state vector ψ_i, defined by Eq.(37).

Continuing the reduction process on $\psi(\tilde{\varepsilon}^{ab})$, we may symbolically express $\psi(\varepsilon^{ab})$ as

$$\psi(\varepsilon^{ab}) = (\otimes_i \psi_i) \otimes (\otimes_k (\psi_0)_k) \otimes \psi(\varepsilon_0^{ab}) \qquad \text{(III.38)}$$

where $(\psi_0)_k$ is the vacuum state of the Fock space generated by the one-dimensional Hilbert space spanned by γ_k^a. This is due to the fact that the wave packet associate to the state γ_k^a is entirely scattered to $\mathcal{I}^-$ and hence it cannot pick up any negative frequency part and therefore there is no particle creation. Thus, the state vector describing particle creation during gravitational collapse decomposes into a product of a state vector $\psi(\varepsilon_0^{ab})$ describing the early time emission multiplied by a product of state vectors describing emission in the various modes at late times.

The natural physical interpretation of each state vector $\psi_i(\cdot)$ is that <u>it describes multiple pair creation in which one of the particles, namely τ_i^a, in each pair enters the black hole just after its formation while the other particle inthe pair, namely $\lambda_i^a = t_i f_i^a + r_i \sigma_i^a$, reaches infinity with amplitude t_i or gets scattered back into the black hole with amplitude r_i at late times</u> (see Figs.7 and 8).

We have mentioned (for the proof see |60|) that the density matrix describing emission to infinity is independent of the choice of the definition of positive frequency on the future horizon. To find the density matrix for particles in in the i-th mode which reach infinity (at late times), we view $\psi_i(\cdot)$ as an e-

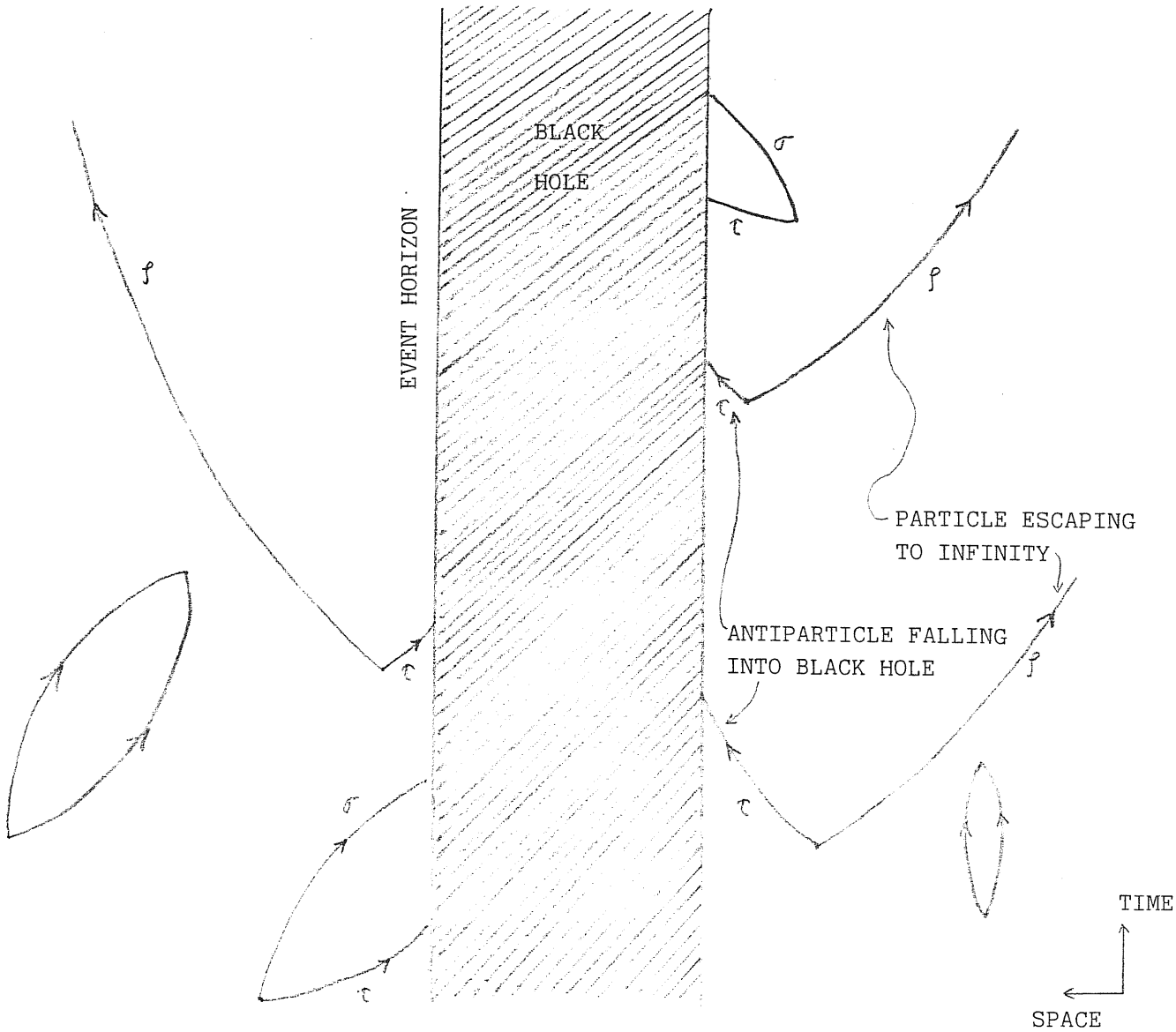

Fig. 8. Possible behavior of particles created in the neighborhood of a black hole by Hawking's effect |83|.

lement of $\mathcal{F}(\mathcal{H}_i) \otimes \mathcal{F}(\mathcal{H}_i'')$ where $\mathcal{H}_i$ is the 1-dimensional Hilbert space spanned by f_i^a, and $\mathcal{H}_i''$ is the 2-dimensional Hilbert space spanned by σ_i^a and τ_i^a. The density matrix (as was already said) is the operator $\mathcal{D}_i : \mathcal{F}(\mathcal{H}_i) \rightarrow \mathcal{F}(\mathcal{H}_i)$, and to express it explicitly we use the definition of density matrix (i.e. $\mathcal{D} = \sum_N P_N |\varphi_N\rangle\langle\varphi_N|$ where $|\varphi_N\rangle$ represent a pure state). Because the f_i^a are 1-particle pure states for the i-th mode, we have $\psi_N = \otimes_N f_i^a$ as the N-particle pure states, therefore the density matrix for emission to infinity in the i-th mode is:

$$\mathcal{D}_i = \sum_N |t_i|^2 \exp(-N 2\pi\omega/\kappa)\, \psi_N \otimes \overline{\psi}_N \qquad \text{(III.39)}$$

where $|t_i|^2 \exp(-N 2\pi\omega/\kappa) = P_N$ is the probability for observing N particles at infinity in the arbitrary mode whose transmission amplitude is $t_i \neq 1$. Notice that each emitted particle has a probability of $|t_i|^2$ of reaching infinity. Since $|t_i|^2$ is the classical absorption cross section of the black hole for the given mode, this means that a black hole placed in a thermal cavity at temperature $KT = \hbar\kappa/2\pi$ would absorb precisely as much thermal black body radiation from the cavity as it would emit via quantum particle creation effects. For a mode with $t_i = 1$ (i.e. $\lambda_i^a = f_i^a$), Eq.(39) gives us precisely the density matrix for black body thermal radiation in the i-th mode, with temperature $KT = \hbar\kappa/2\pi$.

<u>Remark.</u>- The quantum spontaneous particle creation process always produces particles in a pure state ($\sigma_i^a = 0$), it is only because some of these particles go down the black hole ($\sigma_i^a \neq 0$) that one gets a mixed state for emission to infinity. Even so, it is quite remarkable that one gets a steady rate of uncorrelated emission at late times.

The results of all possible measurements on these particles at late times can be obtained using Eqs.(25) and (39). Thus, the expected nuber of particles created and emitted to infinity in an arbitrary mode i is:

$$\langle N_i \rangle = |t_i|^2 \left(\exp(2\pi\omega/\kappa) - 1\right)^{-1} \qquad \text{(III.40)}$$

What is the origin of this created particles? Let me put the issue in the following manner. In a region of spacetime which was flat or asymptotically flat, the appropriate criterion for choosing the $\{F_i\}$ is that they should contain only

positive frequencies with respect to the Minkowski time coordinate. However if one has a spacetime which contains an initial flat region 1 followed by a region of curvature 2 then a final flat region 3, the basis $\{F_{1i}\}$ which contains only positive frequencies on region 1 will not be the same as the basis $\{F_{3i}\}$ which contains only positive frequencies on region 3. This means that the initial vacuum state will not be the same as the final vacuum state ψ_{03}. Then, one can interpretet this as implying that: (i) the time dependent metric or (ii) the gravitational field has caused the creation of a certain number of particles of the scalar field. But, according to what was said before, a gravitational collapse will produce a black hole which settle down rapidly to a stationary symmetric (assuming condition A) equilibrium state characterized, in the most general case, by its mass, angular momentum and electric charge. It has therefore become a common practice to ignore the collapse phase and to represent a black hole simply by one of these solutions (e.g. Kerr-Newman in the most general case). After the collapse phase, these solutions are stationary, then there will not be any mixing of positive and negative frequencies and so one would not expect to obtain any particle creation due to the reason (i) above. Now we can explain the meaning of the terms in Eq.(32): the first term correspond to part (ii) above (i.e. gravitational field cause particle creation) and the second term is due to part (i) above (i.e. the time dependent metric in the collapse phase cause particle creation). To understand how the particle creation can arise from mixing of positive and negative frequencies, it is essential to consider the time-dependent formation phase. But, in the spirit of the "no-hair" theorems, the rate of creation and emission of particles at late times (i.e. after the collapse phase) does not depend on details of the collapse process except through the mass, angular momentum and charge of the resulting black hole |53,54|.

Remark.- What happen if we consider fields of non-zero rest mass? Well, fields of non-zero rest mass do not reach $\mathscr{I}^-$ and $\mathscr{I}^+$, because these are just past and future null infinity. Thus, according to Hawking |54|, one has to describe ingoing and outgoing states for these fields in terms of some concept such as the projective infinity of Eardley and Sachs |86| and Schmidt |87|. However, if the initial and

final states are asymptotically Schwarzschild or Kerr solutions, one can describe the ingoing and outgoing states in a simpler manner by separation of variables and one can define positive frequencies with respect to the time translation Killing vectors of these initial and final asymptotic spacetimes. In the asymptotic future, there are no bound states and in the asymptotic past there could be. But the rate of particle emission in the asymptotic future is not affected by the possible existence of bound states in the past, it will be again that of a body with temperature $\hbar\kappa/2\pi$. The only difference from the zero rest mass case is that the frequency in the thermal factor $(\exp(2\pi\omega/\kappa) - 1)^{-1}$ now includes the rest mass energy of the particle. Thus, there will not be much emission of particles of rest mass m unless the temperature $\hbar\kappa/2\pi$ is greater than m.

What about the spherical symmetry? Hawking |54| has demonstrated the following

Proposition.- The results on thermal emission do not depend on spherical symmetry.

What happen if the collapsing body was rotating and/or is electrically charged? Then the resulting black hole would settle down to a stationary state which is described, no more by the Schwarzschild solution, but by a Kerr-Newman solution characterized by the mass M, the angular momentum S, and the charge Q. Next we must consider a wave packet of the classical scalar massless field of charge e with frequency w and axial quantum number m incident from infinity on a Kerr-Newman black hole.

There is a classical phenomenon called "superradiance" in which waves incident in certain modes on a rotating or charged black hole are scattered with increased amplitude. This effect is independent of the thermal emission and was known before. On a particle description this amplification must correspond to an increase in the number of particles and therefore to stimulated emission of particles. In other words, the black hole will lose energy to the wave packet which will therefore be scattered with the same frequency but increased amplitude. Then we would expect that there would also be a steady rate of spontaneous emission in these superradiant modes which would tend to carry away the angular momentum and/or charge of the black

hole |54|.

Then the difference in the results from thermal emission of a Scharzschild black hole and superradiance (plus thermal) emission of the Kerr-Newman black holes is that the frecuency w in the thermal factor is apropriately replaced as follows:

Reissner-Nordström black hole:	$w \longrightarrow w - e\Phi$	
Kerr black hole	$w \longrightarrow w - m\Omega$	(III.41)
Kerr-Newman black hole	$w \longrightarrow w - e\Phi - m\Omega$	

where Φ is the electrical potential, Ω is the angular velocity of the black hole, w is the frequency and m is the azimuthal number of the wave.

e) PHYSICAL ASPECTS OF BLACK HOLE EMISSION

At first sight, black hole radiance seems paradoxical, for nothing can apparently escape from within the event horizon. Birrel and Davies |53| shown that the average wavelength of the emitted quanta is proportional to M, i.e. comparable with the size of the hole. As it is not possible to localize a quantum to within one wavelength, then it is meaningless to trace the origin of the particles to any particular region near the horizon. The particle concept which is basically global, is only useful near .

The thermal emission to infinity cause the mass of the black hole to decrease, this in turn implies that the area of the horizon would have to go down, thus violating the law that, classically, say that the area cannot decrease. The violation must, presumably, be caused by a flux of negative energy across the event horizon which balances the positive energy flux emitted to infinity. Heuristically, the continuous spontaneous creation of virtual particle-antiparticle pairs around the black hole can be used to explain this negative energy flux. Just outside the event horizon there will be virtual pairs of particles, one with negative energy and one with positive energy. Virtual particle pairs created with wavelength λ separate temporarily to a distance $\sim \lambda$. For $\lambda \sim M$, the size of the black hole, strong tidal forces operate to prevent reannihilation. The negative particle (i.e.

negative energy particle) is in a region which is classically forbidden but it can tunnel through the event horizon to the region inside the black hole where the Killing vector which represents time translation is spacelike. In this region the particle can exist as a real particle (with a timelike momentum vector) even though its energy relative to infinity as measured by the time translation Killing vector is negative. The other particle of the pair, having a positive energy, can escape to infinity where it constitutes a part of the thermal emission (see Fig. 8). The probability of the negative particle tunneling through the horizon is governed by the surface gravity κ since this quantity measures how fast the Killing vector is becoming spacelike.

What is the source of the energy carried away to $\mathscr{I}^+$ by the thermal emission? It can only come from the gravitational field itself, because matter (or equivalently energy) cannot escape from the black hole once it develops an horizon. But we have appointed above, that the thermal emission cause the mass of the black hole to decrease and this is true because the expected energy flux at infinity is proportional to

$$\text{area} \times T^4 \sim M^2\kappa^4 \sim 1/M^2 \qquad \text{(III.42)}$$

This is a runaway process, i.e. a mass decrease causes an increased energy flux at infinity and hence and increased mass loss rate. Thus we arrive to an apparent paradox: How can the black hole lose mass without matter crossing from the interior of the black hole into the outside universe? Inspection of $\langle T_{vv} \rangle$ (where v is the advanced time) at the event horizon shows that it is always negative |53|. As it represents a null flux crossing the event horizon, one can see that the steady loss of mass-energy by the Hawking flux to infinity is balanced by an equal negative energy flux crossing into the black hole from outside. Therefore, the hole loses mass, not by emitting quanta but by absorving negative energy.

In sections b), c) and d), we have assumed that the quantum state is the conventional vacuum state in the "in" region. To what extent the presence of quanta initially will change the particle creation effect? Birrel and Davies |53|(see also

|88|) showed that "the effect of initial quanta fades out exponentially on the same timescale (the collapse timescale) as any surface luminosity, and the black hole soon settles down to thermal equilibrium, having "forgotten" the details of the initial state. Therefore, we may conclude that the Hawking's effect is extremely general, and independent of any physically reasonable initial quantum state". However, it depends (according to what have been treated here) necessarily on the existance of the gravitational collapse, as we state in the following sentence: The existence of the gravitational collapse of a body is a necessary condition for the occurrence of Hawking's effect, i.e. in order to detect the particle creation effect at $\mathscr{I}^+$, starting from vacuum state at $\mathscr{I}^-$. The argument which justify this sentence is: If there is no collapse, then the wave packet corresponding to the state λ^a_i will be entirely scattered by the Schwarzschild static geometry and it cannot pick up any negative frequency part. This is so because the blueshift which suffers upon entering the body star) is exactly compensated by a corresponding redshift when the waves leaves the star. Therefore (for details see |60|), the state τ^a_i does not exist, i.e. $\tau^a_i = 0$. Since obviously $\varepsilon^{ab}_o = 0$ in the absence of collapse, then from Eq.(32) it follows that $\varepsilon^{ab} = 0$; that is there is no detection of particle creation at future null infinity $\mathscr{I}^+$.

What is the back reaction? The fact that the particle emission itself will affect the spacetime geometry is called back-reaction. The calculation of the magnitude and nature of this effect on the spacetime metric is of considerable importance, because it serves for check the consistency of the theory used. Thus, if particle creation causes large local changes in the metric we cannot expect our approach to be valid.

Assuming that one may continue to treat the background metric as classical, then the simplest approach to the back-reaction is to assume that the major back-reaction effect is to cause the mass of the black hole to decrease at precisely the rate necessary to compensate for the expected energy flux at infinity of the created particles. Then, the stream of negative energy across the event horizon will cause the area of the event horizon to shrink, as we have already said (see

Fig. 9(a)). As the area decreases, so does the mass, implying that the temperature

$$T = \frac{\hbar \kappa}{2\pi k_B} = (1.26 \times 10^{26}\,{}^{\circ}K)(1\,gr./M) \qquad \text{(III.43)}$$

and luminosity

$$L = (3.4 \times 10^{46})(M/1\,gr.)^{-2}\,erg. \qquad \text{(III.44)}$$

rise. Schwarzschild black holes therefore have a negative specific heat |53|, they radiate and get hotter, behavior which is typical of self-gravitating systems. From Eq.(43) we see that for a black hole of solar mass (10^{33} gr), the temperature is

$$T_{M=M_\odot} \ll 3\,{}^{\circ}K \qquad \text{(III.45)}$$

where we remember that 3°K is the temperature of the cosmic microwave background. Thus, black holes of this size would be absorbing radiation faster than they emit it and would be increasing in mass. However, in addition to black holes formed by collapse, we have mention the possible existence of the so called micro-black holes |89-91|, formed by density fluctuations in the early universe. These small black holes, being at a higher temperature, would radiate more than they absorbed. Now the particle creation and further thermal emission gets important and they would decrease in mass according to the runaway process described above (see Eq.(42)). So, as they got smaller, they would get hotter and so would radiate faster. As the temperature rose, it would exceed the rest mass of particles such as the electron and the muon, and the black hole would begin to emit them also. When the temperature got up to about 10^{10} °K, electrons and positrons will emerge, and any residual charge on the hole will rapidly disappear. Moreover, superradiance effects will tend to deplete the angular momentum (if any), so the black hole has a tendency to slowly approach the Schwarzschild form. When the temperature got up to about 10^{12} °K or when the mass got down to about 10^{14} gr the number of different species of particles being emitted migth be so great that the black hole radiated away all its remaining rest mass on a time scale of the order of 10^{-23} s. Thus, the continuation of the Hawking's process seems to imply that the hole will "evaporate" away ever faster.

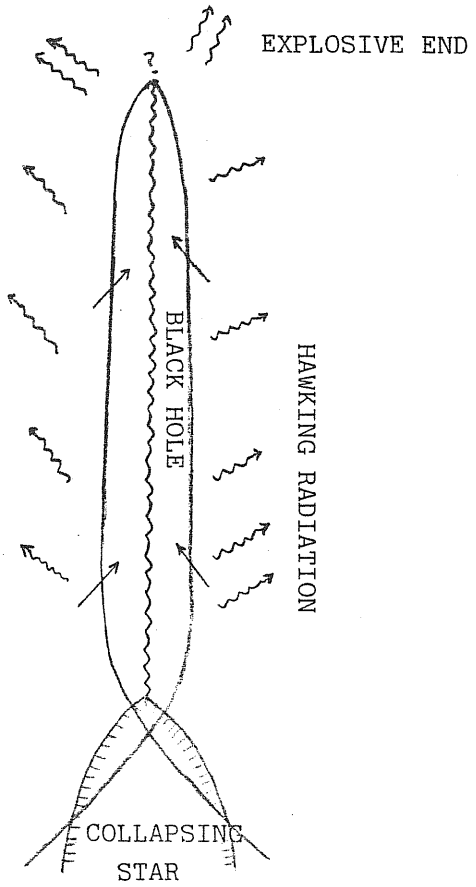

Fig. 9(a). Black hole evaporation. Gradually the flux of negative energy (straight arrows) causes the horizon area to shrink. The process continues until the horizon collapses.

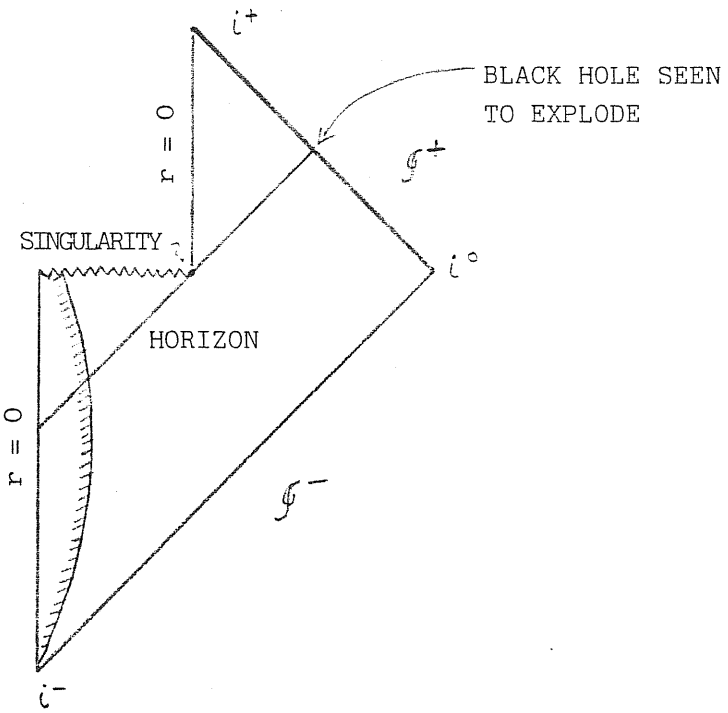

Fig. 9(b). Penrose diagram for an evaporating black hole.

Fig. 9. Diagrams |53|.

It has been conjectured that the end result of this Hawking evaporation process is or an explosive disappearance (Hawking, 1977), or a naked singularity (De Witt, 1975; Penrose, 1979) or perhaps a Planck mass object. Figure 9(b) shows a Penrose diagram for these situations, where the dot represents one of the above three alternatives. In the first case this evaporation will produce an explosion with an energy of 10^{35} ergs. Even if the number of species of particle emitted did not increase very much, we can calculate from the luminosity, Eq.(44), the lifetime of an evaporating black hole, and obtain:

$$t \sim 10^{-26} (M/1\,gr.)^3 \, s. \qquad \text{(III.46)}$$

thus, for a black hole of Fermi size ($\sim 10^{-13}$ cm), about 10^{15} gr, the lifetime is comparable to the age of the universe. As is most likely that such micro-black holes ($M \sim 10^{-18} M_\odot$) would formed in the early times of the universe, this implies that black holes with an initial mass less than 10^{15} gr would have evaporated away by now.

Finally we should say that the most persuasive evidence that the Hawking black hole radiance should be taken seriously is the strong connection that it provides between black holes and thermodynamics |55|. Thus, in order to construct a consistent theory one identifies:

$$k_B T \longrightarrow \hbar \kappa / 2\pi$$
$$S \longrightarrow k_B A/4 \qquad \text{(III.47)}$$

where S is the entropy of the black hole and A is the sum of the surface areas of the event horizons, and then one arrives to establish four thermodynamics laws for black holes (classically!).

f) THE WAVE EQUATION $(\Box + m^2)\phi = 0$

All our assumptions are still valid, except when explicitly stated. We consider now, a mass scalar field, but much of our results can be extended to the massless case. Thus, our scalar field equation is

$$(\Box + m^2)\phi = 0 \qquad \text{(III.48)}$$

where $\phi = \phi(t, r, \theta, \varphi)$ and $m \geq 0$. We also assume all the necessary hypothesis in order that a solution of Eq.(48) exist |92-94|. Due to the symmetry assumptions Eq.(48) can be separeted in (the so-called) mode solutions:

$$\phi = e^{-i\omega t} f_{\omega\ell}(r)\, Y_{\ell m}(\theta, \varphi) \qquad \text{(III.49)}$$

where $Y_{\ell m}$ are the spherical harmonics, and the subscript m must not be confused with the mass of the field. Replacing Eq.(49) into Eq.(48) gives:

$$\left[\frac{\bar{r}^2}{r^2} \frac{d}{dr} r^2 \bar{r}^2 \frac{d}{dr} + \omega^2 - \bar{r}^2 \left(m^2 + \frac{\ell(\ell+1)}{r^2} \right) \right] f_{\omega\ell}(r) = 0 \qquad \text{(III.50)}$$

where $\bar{r} = (1-r^{-1})^{1/2}$, and we are putting 2M=1, for simplicity in notations, but afterwards it can reappears. Defining $r^* = r + 2M \ln\left|\frac{r}{2M} - 1\right|$ or simply $r^* = r + \ln|r-1|$ Eq.(50) reduces to:

$$\frac{d^2 f_{\omega\ell}(r)}{dr^{*2}} + \left[-\left(m^2 + L^2 r^{-2} + r^{-3} \right)\left(1 - r^{-1}\right) + \omega^2 \right] f_{\omega\ell}(r) = 0 \qquad \text{(III.51)}$$

where $L^2 = \ell(\ell+1)$ and where we see that the term

$$V(r) = -\left(m^2 + L^2 r^{-2} + r^{-3} \right)\left(1 - r^{-1}\right)$$

acts as an effective potential. A diagram of this potential can be seen in Fig.10. If $m \neq 0$, then every wave packet should in the asymptotic past, behave like a free ($V = 0$) massless solution propagating in from the past event horizon together with a massive solution (distorted by a $1/r^*$ potential) propagating in from spatial infinity. Similarly, in the asymptotic future, every wave packet should behave as a free massless case propagating to the future event horizon together with a (distorted) massive wave propagating to spatial infinity. If $m = 0$, then every wave packet should approach a free massless solution in both the asymptotic past and future. This would imply that a massless scalar field in Schwarzschild spacetime is determined by its value on the past event horizon and $\mathcal{I}^-$ or, equivalently, by its value on the future event horizon and $\mathcal{I}^+$, because the wave packet should be of the form $f_+(u) + g_+(v)$ as $t \longrightarrow \infty$ and $f_-(u) + g_-(v)$ as $t \longrightarrow -\infty$, where $u=t-r^*$ and $v=t+r^*$ |64|.

Let's analyze the solutions of Eq.(50) using Eq.(51), in the three follow-

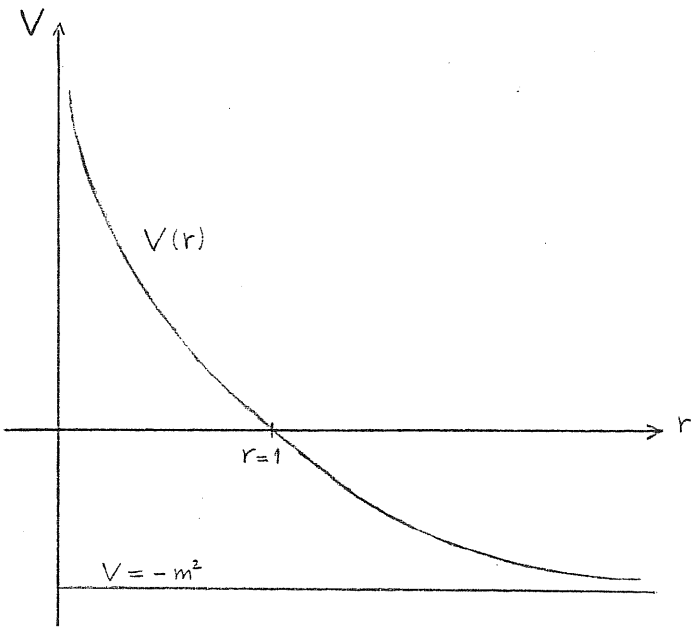

Fig. 10. Diagram of V vs. r. Physically this potencial give rise to reflected waves which may be envisaged as backscattering of the field solutions from the spacetime curvature.

ing regions:

1) Near the horizon: this region is defined by $r-1 < \omega^2/L^2 << 1$, because $r \longrightarrow 1$ we can neglect small terms in Eq.(51) and obtain:

$$\left(\frac{d^2}{dr^{*2}} + \omega^2\right) f = 0 \qquad \text{(III.52)}$$

where we are denoting $f_{\omega\ell}(r)$ by f , the solution of this equation is:

$$f_{1\omega\ell}(r^*) = A_1 \exp(i\omega r^*) \qquad \text{(III.53)}$$

where A_1 is independent of r*.

2) Intermediate region: $1 < r < \infty$, we can neglect the terms ω^2 and m^2 because they are much smaller than the others, thus:

$$\left(\frac{d}{dr} r^2 \bar{r}^2 \frac{d}{dr} - L^2\right) f = 0 \qquad \text{(III.54)}$$

the solution of which is given by:

$$f_{2\omega\ell}(r) = A_2 P_\ell(2r-1) + B_2 Q_\ell(2r-1) \qquad \text{(III.55)}$$

where P_ℓ and Q_ℓ are the Legendre functions and A_2 ,B_2 are constants.

The definitions of regions 1 and 2 do not really lead to an overlap region. However, near the point $r_0 \simeq 1 + \omega^2/(\ell+1)^2$, all the nonderivative terms in the differential equation for f are small |95|. One can approximate the solutions by linear combinations of constant terms and terms proportional to $\ln|r-1|$. Furthermore, since $\ln(r_0-1) \cong \ln(\omega^2/(\ell+1)^2)$ we will neglect terms of the form $\omega \ln(r_0-1)$ when compared to unity. Thus, for r near r_0 we have from Eq.(53):

$$f_1 \simeq A_1(1 - i\omega r^*) \simeq A_1\left([1 + i\omega \ln(r_0-1)] - i\omega \ln(r-1)\right) \qquad \text{(III.56)}$$

f_2 can be determined from the behavior of P_ℓ , Q_ℓ , for 2r - 1 near 1:

$$P_\ell(2r-1) = 1 + O(r-1)$$

$$Q_\ell(2r-1) = -\frac{1}{2}\ln(r-1) + \frac{1}{2}\ln 2 + \sum_{K=1}^{\ell} \frac{1}{K} + O(r-1) \simeq -\frac{1}{2}\ln(r-1) + a \qquad \text{(III.57)}$$

where a is a constant. Fitting f_1 and f_2 near r_0 we obtain a relation between A_2, B_2 and A_1 :

$$A_2 + B_2\left(-\frac{1}{2}\ln(r-1) + a\right) \simeq A_1\left(1 - i\omega \ln(r-1)\right). \qquad \text{(III.58)}$$

Keeping terms only to lowest order in ω we obtain:

$$A_2 \simeq A_1$$
$$B_2 \simeq 2i\omega A_1 \qquad \text{(III.59)}$$

3) Far from the horizon: $r \longrightarrow \infty$, so we can neglect 1/r with respect to unity, thus we gets from Eq.(50)

$$\left(\frac{d}{dr}\left(r^2\frac{d}{dr}\right) + r^2\omega^2 - r^2m^2 - L^2\right)f = 0 \qquad \text{(III.60)}$$

since now $\bar{r} \longrightarrow 1$. This equation have solutions in terms of Coulomb wave functions F_ℓ^c and G_ℓ^c , thus the solution is |96|:

$$f_{3\omega\ell}(r) = A_3\,\frac{F_\ell^c(-\omega(1+v^2)/2v, \omega v r)}{r} + B_3\,\frac{G_\ell^c(-\omega(1+v^2)/2v, \omega v r)}{r} \qquad \text{(III.61)}$$

where $v = (1 - m^2/\omega^2)^{1/2}$. The overlap between regions 2 and 3 will occur when $1/r \ll 1$ but when $1/r \gg \omega v$. Therefore we can neglect 1/r with respect to unity and terms in ωv with respect to both unity and 1/r in Eqs.(55) and (61). To evaluate f_2 in the overlap region we need and asymptotic expansion for P_ℓ and Q_ℓ :

$$P_\ell(2r-1) = \frac{(2\ell)!}{2^\ell(\ell!)^2}(2r-1)^\ell\left(1 + O(1/r)\right) \simeq \frac{(2\ell)!}{(\ell!)^2}r^\ell$$
$$Q_\ell(2r-1) = \frac{(\ell!)^2}{2(2\ell+1)!\,r^{\ell+1}}\left(1 + O(1/r)\right) \qquad \text{(III.62)}$$

therefore we obtain:

$$f_2 \simeq A_2\frac{(2\ell)!}{(\ell!)^2}r^\ell + B_2\frac{(\ell!)^2}{2(2\ell+1)!\,r^{\ell+1}} \quad . \qquad \text{(III.63)}$$

Similarly, we use the asymptotic expansions |96| for the Coulomb functions near $\omega v r \simeq 0$:

$$f_3 = \frac{A_3}{r}\left[C_\ell\left(\frac{-\omega(1+v^2)}{2v}\right)(\omega v r)^{\ell+1}\left(1 + O(\omega v r)\right)\right]$$
$$+ \frac{B_3}{r}\left[\frac{(\omega v r)^{-\ell}}{(2\ell+1)\,C_\ell(-\omega(1+v^2)/2v)}\left(1 + O(\omega v r)\right)\right] \qquad \text{(III.64)}$$

where

$$C_\ell(\eta) = 2^\ell e^{-\pi\eta/2}\,\frac{|\Gamma(\ell+1+i\eta)|}{(2\ell+1)!} \qquad \text{(III.65)}$$

and so we obtain by equating f_3 and f_2 |95|:

$$A_2\frac{(2\ell)!}{(\ell!)^2} \simeq A_3\,C_\ell\left(\frac{-\omega(1+v^2)}{2v}\right)(\omega v)^{\ell+1}$$
$$B_2\frac{(\ell!)^2}{2(2\ell+1)!} \simeq B_3\left(\frac{(\omega v)^{-\ell}}{(2\ell+1)\,C_\ell(-\omega(1+v^2)/2v)}\right) \quad . \qquad \text{(III.66)}$$

By demanding that f have unit incoming amplitude, and using an asymptotic form for F^c and G^c in Eq.(61) we obtain:

$$A_3 + iB_2 = 2 \qquad \text{(III.67)}$$

and finally, from Eqs.(59),(66) and (67):

$$A_1 = \frac{2(\ell!)^2}{(2\ell)!}(c_\ell)(\omega v)^{\ell+1} \qquad \text{(III.68)}$$

D. Boulware |97| has used Green's functions in order to solve the wave equation (48) in a Schwarzschild spacetime. He does not consider a time-dependent phase of the metric (e.g. a gravitational collapse), for this reason his boundary conditions are different to those we are assumed here. His results are that starting from a vacuum state he find that it is stable, i.e. there is no particle creation effect. This seems reasonable, according to what was said before; a curved spacetime cannot by itself create particles, it needs an effect ("match effect"?) which starts to create particles (in our case the gravitational collapse) and after this process the curvature of the spacetime stabilize the steady state production and emission to infinity of particles created.

After some calculations, Boulware found the S-matrix for the scattering process of scalar field waves in a Schwarzschild curved (but time-independent) spacetime, and it is:

$$S = \frac{1}{\alpha^\ell(\omega+i\varepsilon)}\begin{pmatrix} -\alpha^\ell(-\omega-i\varepsilon)^* & 1/(2\omega)^{1/2} \\ 1/(2\omega)^{1/2} & \alpha^\ell(-\omega-i\varepsilon) \end{pmatrix} \qquad \text{(III.69)}$$

and with the relations found in |97|, can be verified that it is unitary as it should be.

g) CONCLUSIONS

(i) The central theme is that the gravitational collapse of a star, which settles down to a stationary black hole, yields a flux of particles at $\mathcal{J}^+$, which are created from the vacuum state in the vicinity of the horizon; this flux has shown to possess a thermal spectrum corresponding to the temperature $\hbar\kappa/2\pi$.

If there is no gravitational collapse, as it has been see, then there is no "Hawking's effect" of particle creation.

(ii) We can observe from Eqs.(19) and (26) that the S-matrix in the case in which we have considered the time-dependent phase of the collapse is an infinite matrix. Instead we can observe from Eq.(69) that the S-matrix for the same curved spacetime (i.e. Schwarzschild spacetime) but without consider the time-dependent phase of the metric is a finite (2x2) matrix. The reason is clearly, that in the first case there is the phenomenon of particle creation while in the second this effect does not appear.

(iii) To assume (for technical reasons) that the spacetime is flat out of a compact spacetime region, is an unphysical assumption that is not satisfied by the Schwarzschild or Kerr-Newman spacetime solution of Einstein equations. An open problem is to find to what physical matter distribution such an assumption leads.

(iv) For a distant observer the collapse never ends because the surface of the star always tends but never reach the future event horizon. This would imply that the particle production due to the time variation of the metric, for a distant observer, never ends. Of course, when the surface tends to the horizon, the metric tends to the stationary state and therefore we can expect that in this situation $\varepsilon_0^{ab} \longrightarrow 0$.

REFERENCES

|1| MISNER,C.W.,THORNE,K.S.,WHEELER,J.A.; GRAVITATION, Freeman and Company, San Francisco, 1973.

|2| HARRISON,E.R., COSMOLOGY, Cambridge University Press, Cambridge, 1981.

|3| HAWKING,S.W.,ISRAEL,W. in GENERAL RELATIVITY: an Einstein centenary survey, eds. S.W.HAWKING and W.ISRAEL, Cambridge University Press, 1979; Chapter 1.

|4| ISRAEL,W.; (1985), Canadian Journal of Physics 63 , 34.

|5| GEROCH,R. and HOROWITZ,G.; in |1|, Chapter 5.

|6| HAWKING,S.W.,ELLIS,G.F.R., THE LARGE SCALE STRUCTURE OF SPACETIME, Cambridge University Press, 1973.

|7| THIRRING,W.; GRAVITATION, Lecture given in the academic training programme of CERN, 1968-1969.

|8| THIRRING,W.; CLASSICAL FIELD THEORY, Springer-Verlag, 1979.

|9| OPPENHEIMER,J.R. and VOLKOFF,G.; (1939), Phys. Rev. 55, 374.

|10| CANUTO,V.; (1974), Ann. Rev. Astron. Astrophys. 12, 167; (1975), 13, 335.

|11| MILLER,J.C. and SCIAMA,D.M.; in GENERAL RELATIVITY AND GRAVITATION, ed. by A. HELD, Plenum Press New York, 1980, Vol 2, Chapter 9.

|12| MISNER,C.W., in Brandeis University Summer Institute in Theoretical Physics, 1968, ed. by M. CHRETIEN, S. DESER and J. GOLDSTEIN, Vol 1, Chapter 3.

|13| PRASANNA,A.R.; (1980), Riv. del Nuovo Cimento, 3, N° 11, 1.

|14| DE FELICE,F.; (1968), Il Nuovo Cimento, 57B, 351.

|15| DE FELICE,F. and MAEDA,K.; (1982), Progress of Theor. Phys., Vol 68, N°6,1967.

|16| DE FELICE,F. and YUNQIANG,Y.; (1983), Il Nuovo Cimento, Vol 76B, N°1, 28.

|17| RAYCHAUDHURI,A.K.; (1975) Ann. Inst. Henri Poincare, Vol 22, N°3, 229.

|18| MISRA,R.M., and SRIVASTAVA,D.C.; (1974), Phys. Rev. D, Vol 9, N°4, 844.

|19| VICKERS,P.A.; (1973) Ann. Inst. Henri Poincare, Vol 18, N°2, 137.

|20| BARDEEN,J.M.; (1968) Bull. Am. Phys. Soc. Vol 13, 41.

|21| NOVIKOV,I.D.; (1966) JETP LETT. Vol 3, 142.

|22| COOPERSTOCK,F.I. and DE LA CRUZ,V.; (1978) Gen. Rel. Grav. Vol 9, N°9, 835.

|23| BONNOR,W.B. and WICKRAMASURIYA; (1975) Mont. Not. Roy. Astr. Soc.,170, 643.

|24| HISCOCK,W.A.; (1981) J. Math. Phys., Vol 22, N°1, 215.

|25| MAJUMDAR,S.D.; (1947) Phys. Rev., Vol 72, N°5, 390.

|26| ISRAEL,W.; (1966) Nuovo Cimento, 44B, 1

|27| KUCHAŘ,K.; (1968) CZECH. J. Phys., B18, 435.

|28| BOULWARE,D.G.; (1973) Phys. Rev. D, Vol 8, N°8, 2363.

|29| DE LA CRUZ,V.,CHASE,J.E. and ISRAEL,W.; (1970) Phys. Rev. Lett., Vol 24, N°8, 42.

|30| GRAVES,J.C. and BRILL,D.R.; (1960) Phys. Rev., Vol 120, N°4, 1507.

|31| DE LA CRUZ,V. and ISRAEL,W.; (1967) Il Nuovo Cimento, Vol 51A, N°3, 744.

|32| LAKE,K. and NELSON,L.; (1980) Phys. Rev. D, Vol 22, N°6, 1266.

|33| COHEN,J.M.; (1968) Phys. Rev., Vol 173, N°5, 1258.

|34| COHEN,J.M.; (1967) Phys. Rev., Vol 8, 1477.

|35| FUJIMOTO,M.; (1968) Astr. Journal, 152, 523.

|36| DE FELICE,F. and YUNQIANG,Y.; (1981) SISSA Preprint N°4/81/A.

|37| DE FELICE,F., MILLER,J.C. and YUNQIANG,Y.; (1984) SISSA Preprint N°39/84/A.

|38| MILLER,J.C. and DE FELICE,F.; (1984) SISSA Preprint N°57/84/A.

|39| THIRRING,W.; CLASSICAL DYNAMICAL SYSTEMS, Springer-Verlag, 1978.

|40| SEXL,R.U.; (1970), Acta Physica Austriaca, Suppl. 7, 308.

|41| LICHNEROWICZ,A.; THEORIES RELATIVISTES DE LA GRAVITATION ET DE L'ELECTROMAGNETISME, Paris 1955.

|42| ISRAEL,W.; (1958) Proc. Roy. Soc., A248, 404.

|43| O'BRIEN,S. and SYNGE,J.L.; (1952) Comm. Dublin Inst. Adv. Stud., A9, "Jump conditions at discontinuities in General Relativity".

|44| LEIBOVITZ,C.; (1969) Il Nuovo Cimento, Vol 60B, N°2, 254.

|45| STEPHANI,H.; GENERAL RELATIVITY, ed. by J. Stewart, First pub. in English by Cambridge Univ. Press, 1982.

|46| OPPENHEIMER,J.R. and SNYDER,H.; (1939) Phys. Rev., Vol 56, 455.

|47| KRAMER,D., STEPHANI,H., HERLT,E. and MACCALLUM,M.; EXACT SOLUTIONS OF EINSTEIN'S FIELD EQUATIONS, Cambridge Univ. Press, 1980.

|48| WEINBERG,S.; GRAVITATION AND COSMOLOGY, ed. by J.Wiley&Sons, N.York, 1972.

|49| WEINBERG,S.; (1967) Phys. Rev. Lett., 19, 1264.

|50| SALAM,A.; in ELEMENTARY PARTICLE THEORY, ed. by N.Svartholm (Stockholm: Almquist, Forlag AB), 1968; p.367.

|51| GEORGI,H. and GLASHOW,S.L.; (1974) Phys. Rev. Lett., 32, 438.

|52| ISHAM,C.J.; in QUANTUM GRAVITY: An Oxford Symposium, eds. C.J.Isham, R.Penrose and D.W.SCIAMA; Oxford:Clarendon, 1975.

|53| BIRREL,N.D. and DAVIES,P.C.W.; QUANTUM FIELDS IN CURVED SPACETIME, Cambridge Univ. Press, 1982.

|54| HAWKING,S.W.; (1975) Comm. Math. Phys., 43, 199.

|55| BARDEEN,J.M., CARTER,B. and HAWKING,S.W.; (1973) Comm. Math. Phys., 31, 161.

|56| ROBERTS,M.D.; (1985) Classical and Quantum Gravity, 2, N°4, L69.

|57| SEXL,R.U. and URBANTKE,H.K.; (1969) Phys. Rev., 179, 1247.

|58| HAWKING,S.W.; (1970) Comm. Math. Phys., 18, 301.

|59| ZEL'DOVICH,Ya.B. and PITAEVSKY,L.P.; (1971) Comm. Math. Phys., 23, 185.

|60| WALD,R.M.; (1975) Comm. Math. Phys., 45, 9.

|61| WALD,R.M.; (1979) Annals of Phys., 118, 490.

|62| KAY,B.S.; (1982) in LECTURES NOTES IN MATHEMATICS, 905; DIFFERENTIAL GEOMETRIC METHODS IN MATHEMATICAL PHYSICS, Spriger-Verlag, Berlin, 1982.

|63| KAY,B.S.; in MATHEMATICAL PROBLEMS IN THEORETICAL PHYSICS: Proceedings Lausanne (1975) ed. K.Osterwalder; Springer Lectures Notes in Physics N°116, Springer-Verlag, Berlin, 1980.

|64| WALD,R.M.; GENERAL RELATIVITY, The University of Chicago Press, 1984.

|65| STREATER,R.F. and WIGHTMAN,A.S.; PCT, SPIN AND STATISTICS, AND ALL THAT; Benjamin/Cummings Publishing Company, Inc. Massachusetts, 1964.

|66| STROCCHI,F.; PROBLEMI E METODI MATEMATICI IN TEORIA DI CAMPI, Vol Primo, Lectures Notes SISSA

|67| SEILER,R.; in TROUBLES IN THE EXTERNAL FIELD PROBLEM FOR INVARIANT WAVE EQ., ed. A.S.WIGHTMAN, N.Y. Gordon and Breach, 1971.

|68| TEUKOLSKY,S.A.; (1972) Phys. Rev. Lett., 29, 1114.

|69| GEROCH,R.; (1978) J. Math. Phys., 19, 1300.

|70| DIMOCK,J. and KAY,B.S.; (1982) Ann. Inst. Henri Poincare, Vol 37, N°2, 93.

|71| DIMOCK,J.; (1979) J. Math. Phys., 20, 2549.

|72| WIGHTMAN,A.S.; RELATIVISTIC WAVE EQ. AS SINGULAR HYPERBOLIC SYSTEMS, in Proc. of the Symp. in pure mathematics, Am. Math. Soc., Providence,1973,Vol 23.

|73| WIGHTMAN,A.S.; INVARIANT WAVE EQ., in Proc. of 1977 Erice Summer School, Lecture Notes in Physics, Springer-Verlag, N.Y. 1978, Vol 73.

|74| KAY,B.S.; (1978) Comm. Math. Phys., 62, 55.

|75| KAY,B.S.; (1980) Comm. Math. Phys., 71, 29.

|76| BIRREL,N.D. and FORD,L.H.; (1978) Ann. of Phys., 122, 1.

|77| DE WITT,B.; (1975) Phys. Rep., 19C, 295.

|78| PARKER,L.; ASYMPTOTIC STRUCTURE OF SPACETIME, ed. by F.P.Esposito, L.Witten, Plenum, N.Y. 1977.

|79| ISHAM,C.J.; QUANTUM FIELD THEORY IN CURVED SPACETIMES: A GENERAL MATHEMATICAL FRAMEWORK, in Lect. Notes in Math., Springer-Verlag, N.Y. 1978, Vol 676.

|80| DAVIES,P.C.W.; QUANTUM FIELDS IN CURVED SPACETIME, in General Relativity and Gravitation, ed. by A.Held, Plenum Press, N.Y. 1980, Vol 1.

|81| GIBBONS,G.W.; QUANTUM FIELD THEORY IN CURVED SPACETIME, in General Relativity, ed. by S.W.Hawking and W.Israel, Cambridge Univ. Press, Cam. 1979.

|82| HAWKING,S.W.; QUANTUM COSMOLOGY, Lect. given at the LESHOUCHES SUMMER SCHOOL, France, 1983.

|83| HAWKING,S.W.; (1974) Nature, 248, 30.

|84| HAWKING,S.W.; THE EVENT HORIZON, in BLACK HOLES, ed. by C.M.De Witt and B.S. De Witt, Gordon and Breach, N.Y. 1973.

|85| HAJICEK,P.; (1977) Acta Physica Austriaca, Suppl. 18, 835.

|86| EARDLEY,D. and SACHS,R.K.; (1973) J. Math. Phys., 14.

|87| SCHMIDT,B.G.; (1974) Comm. Math. Phys., 36, 73.

|88| WALD,R.M.; (1975) Phys. Rev. D, Vol 13, N°12, 3176.

|89| HAWKING,S.W.; (1971) Mont. Not. R. Astr. Soc., 152, 75.

|90| CARR,B.J. and HAWKING,S.W.; (1974) Mont. Not. R; Astr. Soc., 168, 399.

|91| CARR,B.J.; (1975) Astro. Journal, 201, 1.

|92| CHOQUET-BRUHAT,Y., CHRISTODOULOU,D. and FRANCAVIGLIA,M.; (1979), Ann. Inst. Henri Poincare, Vol 31, N°4, 399.

|93| CHOQUET-BRUHAT,Y.; HYPERBOLIC PARTIAL DIFFERENTIAL EQUATIONS ON A MANIFOLD, Battelle Rencontres (1967), C.De Witt and J.Wheeler eds., Benjamin, 1968.

|94| FRIEDLANDER,F.G.; THE WAVE EQUATION ON A CURVED SPACETIME, Cambridge Univ. Press, Cambridge 1975.

|95| UNRUH,W.G.; (1976) Phys. Rev. D, Vol 14, N°12, 3251.

|96| ABRAMOWITZ,M. and STEGUN,A.; HANDBOOK OF MATHEMATICAL FUNCTIONS, Dover, N. York 1965.

|97| BOULWARE,D.G.; (1975) Phys. Rev. D, Vol 11, N°6, 1404.

|98| BRILL,D.R., CHRZANOWSKI,P.L., PEREIRA,M., FACKERELL,E.D. and IPSER,J.R.; (1972) Phys. Rev. D, Vol 5, N°8, 1913.

|99| SEXL,R.U. and URBANTKE,H.K.; GRAVITATION UND KOSMOLOGIE, Wissenschaftsverlag, B.D.R. 1983.