Effective theory of a chiral superfluid

Thesis submitted for the degree of
"Doctor Philosophiæ"

CANDIDATE

Pietro Donatis

SUPERVISOR

Prof. Roberto Iengo

October 1994

Contents

1. Introduction and summary

The discovery of the high T_c superconductivity in 1986 [1] has opened new perspectives, not only from the obvious experimental and applicative point of view but also from the theoretical point of view. This new kind of superconductivity is in fact supposed to be based on a mechanism which appears to be completely new. To be more specific it seems that the interacting fermions model on which is based the BCS theory of the standard superconductors, is not adequate for the new phenomenon [2] [3].

The main peculiarity of this new kind of superconductors is the anisotropy. Their atomic structure is in fact layered, the planes being made by Cu-O atoms. Above the critical temperature the resistivity for currents flowing in direction orthogonal to the planes is from a hundred to ten thousand times larger than the resistivity parallel to the planes. Below the critical temperature there is superconductivity in all directions. The anisotropy is anyway manifest in the penetration of an external magnetic field (Meissner effect) which is rather different in the different directions. What happens is that the penetration depth is much bigger in the perpendicular direction than on the plane (for an elementary introduction to the properties of the cuprate superconductors we refer, for instance, to [4]).

A rather intriguing theory has been proposed to explain this new kind of superconductivity. This theory is anyon superconductivity. As is known from 1982, see references [5] [6], in two space dimensions bosons and fermions are not the only possible quantum statistics as it is in the higher dimensions case. That is interchanging two of these two-dimensional particles the total wavefunction can acquire any phase, and not only 0 or π. These two-dimensional particles with this richer statistical property have been called anyons by Wilczek. In a very naive way one can say that anyons, having statistical properties that stay between bosons and fermions, can be thought as fermions with an attractive force between them, and can therefore undergo Bose condensation.

In 1988 Laughlin [7] [3] developed concretely this naive idea and argued that a system of two-dimensional particles with a statistics intermediate between fermions and bosons (semions), because of the statistical attractive force, could couple to form bosons and then condensate. This idea has been further supported by mean-field computations [8] [9]. The fractional statistics can be implemented by means of the coupling of the matter field to a Chern-Simons gauge field where the field strength (the "Chern-Simons magnetic field") is proportional to the matter density. The mean-field view is that every particle carries on top a small fraction of this "magnetic field" and this, by Aharonov-Bohm effect, leads to the fractional statistics.

From this construction it is clear that, because of the Chern-Simons field, in an anyon system parity is not conserved. Therefore if anyon superconductivity has to be the right

explanation of high T_c superconductivity, one should be able to test experimentally on the cuprate materials the mentioned parity violation. Many experimental tests have been proposed, see for example reference [10]. Indeed there are many experimental difficulties, the main of which seems to be the impossibility of isolating one single layer from all the others. This leads to measure chiral properties on the average of many different layers, and of course there is no reason to expect that such average should be different from zero. The only experiment which measures locally the chirality of a layer is that of reference [11]. A muon is placed very close to one layer and the variation of its magnetic moment is measured. This experiment gave so far no sign of chirality. This perspective remains thus at a rather speculative level.

In this thesis we analyse a model which takes its inspiration on the above anyon superconductivity arguments, without attempting a definite comparison the real high T_c materials. Rather our aim is to explore theoretically possible scenarios alternative to the standard theory of superconductors. We consider an effective Landau-Ginzburg lagrangian living on a two-dimensional surface which describes a quantum fluid and analyse its properties. In our model a non-relativistic scalar field, playing the role of the Landau-Ginzburg parameter, is coupled to a Chern-Simons gauge field [12]. This system is of course chiral but its more peculiar feature is a *gap* in the energy spectrum of its excitations.

On the contrary, usual superfluids have a dispersion law which is linear in momentum for small momenta and the spectrum is therefore gapless. This is due to the presence of compressional excitations, the phonons. In our case the existence of the gap is precisely due to the presence, in the intrinsic fluid's dynamics, of a gauge potential, the Chern-Simons field. This is a sort of Higgs phenomenon in which a massless excitation (the phonon) disappears giving mass (the gap) to a gauge field. Because of the gap our fluid does not admit compressional modes as phonons and is therefore incompressible.

Indeed we studied [13] the gap structure of a more general system. We have considered the gauge field to be as general as possible, consistently with the general request of a maximum number of two derivatives. In this way the gauge field has both a Chern-Simons and a Maxwell term. Studying the gap structure we have found that in the general case there are two propagating degrees of freedom, the scalar field and the gauge field, each one having its energy gap. If the theory is of pure Maxwell type the two gaps are degenerate. The degeneracy is resolved adding also the Chern-Simons term. If there is only the Chern-Simons term one of the two gaps becomes infinity and therefore the corresponding degree of freedom (that of the gauge field) is frozen and therefore, in this case, there is only one physical degree of freedom, with a gap.

We have also studied the possibility of flowing of persistent currents in this general system with both Chern-Simons and Maxwell terms. We have found that such currents

are zero if the gauge field is purely Maxwell, and they are maximal in the case of pure Chern-Simons. We take this as a possible motivation for considering the chiral case, and, in fact, all the further analyses have ben performed on the purely Chern-Simons system.

We have studied the spectrum of the pure Chern-Simons theory in great detail. First we have analyzed the elementary excitations of the fluid with a small deformation approach [12] and then we studied the vortex excitations [12] [14]. We have found that both these different kinds of excitations (elementary excitations and vortices) have the same gap. Notice that the presence of the gap is a property which ensures the persistent supercurrents. In fact, from a very heuristically point of view, since there is the gap the flow of the persistent currents, is protected against external disturbances which try to reduce it, in the sense that as far as the energy carried by the external sources is less than the gap, no interaction, and therefore no dissipation, is possible.

The presence of the gap gives also rise to another consideration about the behaviour of the quantum fluid in presence of an external constant magnetic field. For standard superconductors the mechanism of the screening of external magnetic field is essentially based on the Higgs mechanism. In fact the standard superconductors admit, as we said before, the compressional mode which, being gapless, can be interpreted as the Goldstone boson which gives mass to the external electromagnetic field. Having acquired a mass the magnetic field decays with an exponential law, and so there is screening.

In our case things are different because, as discussed above, the gapless mode has already been "eaten up" by the gauge field responsible of the internal dynamics of the fluid. Thus there is no massless Goldstone boson which can provide the "mass term" for the electromagnetic field. Nevertheless we were able to find [12] that the most energetically favourable configuration for the system is that in which there is screening of the external magnetic field. We also found that this screening is highly anisotropic. In fact we have analysed this magnetic property of the system by considering a multilayered bulk built by piling many two-dimensional layers in which lives our fluid. Then we have considered two different cases. Firstly the one in which the magnetic field is pointing in a direction which is orthogonal to the layers' planes (and penetrates in the direction parallel to the planes). Secondly the one in which the magnetic field points parallel to the layers (and penetrates orthogonally). We have found that In the first case the penetration depth has the same analytic expression of the penetration depth of the standard (isotropic) superconductors of type II. Whereas in the other configuration we found a penetration depth proportional to some fractional power of the dimension of the sample. That is we found a behaviour which is in some respect qualitatively similar to what is the actual behaviour of the cuprate superconductor we have briefly sketched above.

Actually we made this analysis in two different cases. It is of course assumed that the

layer where the fluid lies, provides a background charge that neutralizes moving charges so that the fluid is globally neutral. One can imagine two different situations. In the first [12] we assumed that the background charge cannot move so that there appears local electrostatic effects because the fluctuations in the density of the fluid give rise to fluctuation in the charge that cannot be neutralized locally. In the second [15] we assumed that the background charge is not rigidly fixed in space but can somehow move and compensate the local excess of electric charge so that the system remains locally neutral. In the first case we added to the hamiltonian of the system an electrostatic term which accounts for the local electrostatic effects. In the second case we dropped such term. In the two different cases the analysis leads essentially to the same result described above, with a quantitative difference in the case of the penetration depth orthogonal to the layers: with the electrostatic term it goes with the cubic root of the dimensions of the sample, without it goes with the square root of the dimensions of the sample.

We have further considered the problem of testing chirality. We considered the problem [10] of an electromagnetic wave incident perpendicularly on a plane in which lives our chiral fluid. We have found that the transmitted wave is circularly polarized if the energy of the incident wave is of the order of the energy of the gap. This would correspond to a microwave. No polarizing effect is present for energy different from this resonance. As far as we know, similar experiments have always been done with visible light. It should be interesting if it could be experimentally possible to repeat the experiment using microwaves.

The thesis is organized as follows. In chapter two we introduce the general model in which the gauge field has both a Chern-Simons and a Maxwell term. We compute the gap structure and show that the persistent currents are different from zero only if the dynamics of the system is dominated by the Chern-Simons gauge field. This is done by taking many piled annuli and consider the possible current induced by a quantized phase for the matter field, as if it were a vortex. We also compute the magnetic field generated by such persistent currents.

In chapter three we turn to the pure Chern-Simons chiral model and study the spectrum of the small deformations and the localized currents due to such deformations. As discussed before, the spectrum has a gap. The associated currents are circularly polarized if the energy of the excitation is that of the gap. We study the vortex excitations and find that they require at least the energy of the gap. We study the particular case, called self-dual case, in which the vortex has exactly the energy of the gap. We also make a variational analysis of the vortex excitations. A summary of the spectrum of the system closes the chapter.

Chapter four is somewhat away from the main subject of the thesis. We considered a relation between the self-dual vortex excitations of pure Chern-Simons and pure Maxwell

theories. More precisely we study the vortex excitations of two different Chern-Simons theories connected by a parity or time reversal transformation. We show that these vortices are both solutions of the parity invariant Maxwell theory provided a convenient choice of the parameters is made. Everything works as if when the parity and time reversal invariance break up, the Maxwell theory breaks in the two chiral Chern-Simons theories with all solutions connected by a parity transformation.

Chapter five is devoted to the study of the magnetic properties of the quantum fluid. We consider a bulk made up of many two-dimensional layers and study the penetration of an external uniform magnetic field. In this chapter the analysis is made taking into account the electrostatic interactions between the charged inhomogeneities of the fluid. To take into account the essential anisotropy of the system the study is made in two different configurations: the one in which the magnetic field is orthogonal to the layers' plane and penetrates in the parallel direction, and the one in which the magnetic field is parallel to the layers and penetrates orthogonally. The analysis is done by finding the penetration depth the minimizes the energy of the system. In the first case we study the penetration depth of the magnetic field both from the side of the sample and from the magnetic vortices finding, in both cases, a finite penetration depth. In the second case we find a penetration depth which goes with the cubic root of the sample's dimensions.

In chapter six we repeat the analysis of chapter five dropping the electrostatic term from the hamiltonian. In this case a configuration in which the mass term of the magnetic field, proportional to the square of the electromagnetic gauge field, is cancelled by the Chern-Simons gauge field (thus possibly ruining the Meissner effect) is studied in detail. We show that in the first case (with the orthogonal magnetic field) such configuration is energetically not favoured and the penetration depth is the same as in the case studied in chapter six. In the second case (with the parallel magnetic field) such configuration is energetically favoured but we have nevertheless a penetration length that goes with a fractional power of the sample's dimensions. So the electrostatic term does not play an essential role in the screening of the magnetic field.

In chapter seven we study the incidence of an unpolarized electromagnetic wave propagating orthogonally to a plane in which our chiral quantum fluid lives. We study the polarization of the transmitted wave and find that it is circularly polarized if the energy of the incident wave is that of the energy gap of the fluid.

The thesis is closed by an appendix that shows the connection between our presentation of the chiral fluid and a version of the mean-field Chern-Simons description of anyons.

2. The model

In this chapter we introduce our model of a non-relativistic fluid living in a two-dimensional surface. The intrinsic dynamic of the fluid is described by means of an effective lagrangian a la Landau-Ginzburg representing an universality class which should summarize the relevant degrees of freedom of some underlying microscopic theory not explicitly specified.

Our fluid is therefore described by a non-relativistic complex field, ϕ, which plays the role of the Landau-Ginzburg order parameter, coupled to a gauge field. This gauge field has both a Maxwell term and a Chern-Simons term breaking parity and time reversal. This is the most general gauge invariant lagrangian with minimal coupling to a vector field once the maximum number of two derivatives is required. We stress here that this gauge field is not a real electromagnetic field, but it is only there to give an effective description of the microscopic dynamic of the fluid. Later we will also couple the fluid to real electromagnetic field.

$$\begin{aligned}\mathcal{L} = \frac{1}{2}g_E\left(\partial_0 A_i - \partial_i A_0\right)^2 - \frac{1}{2}g_B\left(\epsilon_{ij}\partial_i A_j\right)^2 - \alpha\epsilon_{\lambda\mu\nu}A_\lambda\partial_\mu A_\nu + \\ + \frac{1}{2m}\phi^\dagger\vec{D}^2\phi + \frac{i}{2}\left(\phi^\dagger\dot{\phi} - \dot{\phi}^\dagger\phi\right) + A_0\left(|\phi|^2 - \rho_0\right) - V(|\phi|)\ .\end{aligned} \tag{2.1}$$

$\phi(\vec{x},t)$ is the complex field which plays the role of order parameter and is related to the density by the relation:

$$\rho(\vec{x},t) = |\phi(\vec{x},t)|^2\ . \tag{2.2}$$

The covariant derivative is $D_i = \partial_i - iA_i$. Notice that A_0 is coupled to the density fluctuation from the mean value $\delta\rho = \rho - \rho_0$, ρ_0 being the average density representing the neutralizing background necessary for the consistency of the theory. Since for conservation of the total number of particles the integral over all the surface of $\delta\rho$ is zero, we can write it as the divergence of some vector field $\vec{u}(\vec{x})$ which we choose to be irrotational $\vec{\nabla}\wedge\vec{u}=0$:

$$\delta\rho = \vec{\nabla}\cdot\vec{u}\ . \tag{2.3}$$

Notice that the coupling constants for the electric (g_E) and the magnetic part (g_B) of the Maxwell term are different. They need to be equal only if the theory is Lorentz invariant, that is considering a relativistic theory. We draw the reader's attention to the fact that in $2+1$ dimensions these coupling constants have the dimension of a length and α is dimensionless.

$V(|\phi|)$ is some potential which in the following, for definiteness, will be taken to be $V(|\phi|) = \frac{\lambda}{2}\left(|\phi|^2 - \rho_0\right)^2 = \frac{\lambda}{2}(\delta\rho)^2$.

Performing the variations of (2.1) with respect to $\phi^\dagger$, A_i, A_0 one gets (in the gauge $\vec{\nabla}\cdot\vec{A}=0$) the field equations:

$$i\dot{\phi} = -\left(\frac{1}{2m}\vec{D}^2 - A_0 + \frac{\lambda}{2}\delta\rho\right)\phi \tag{2.4}$$

$$g_B\,\epsilon_{ij}\partial_j B = J_i - g_B\partial_0(\partial_0 A_i - \partial_i A_0) - 2\alpha\epsilon_{ij}(\partial_j A_0 - \partial_0 A_j) \tag{2.5}$$

$$g_B \triangle A_0 = \delta\rho - 2\alpha B\ . \tag{2.6}$$

Here we have defined:

$$B = \epsilon_{ij}\partial_i A_j \qquad\qquad J_i = \frac{1}{2mi}\left(\phi^\dagger\partial_i\phi - \partial_i\phi^\dagger\phi - 2iA_i\phi^\dagger\phi\right)\ . \tag{2.7}$$

Notice that the first one is a non-linear Schrödinger equation coupled to a gauge field. The other two equations are Maxwell-Chern-Simons equations (note that $\partial_0 A_i - \partial_i A_0 = E_i$). For $\alpha = 0$ we recover the two-dimensional Maxwell equations (though with two different couplings). For $g_B = 0$, on the other hand, from equation (2.6) we get $\delta\rho = 2\alpha B$ which is the usual Chern-Simons constraint relating the field strength to the matter density.
The hamiltonian density of this model is written:

$$\mathcal{H} = \frac{1}{2}g_B\left(\partial_0 A_i - \partial_i A_0\right)^2 + \frac{1}{2}g_B\left(\epsilon_{ij}\partial_i A_j\right)^2 - \frac{1}{2m}\phi^\dagger\vec{D}^2\phi + \frac{\lambda}{2}(\delta\rho)^2\ . \tag{2.8}$$

2.1. The spectrum

We begin noting that

$$\phi(\vec{x}) = \sqrt{\rho_0} \qquad\qquad \vec{A} = 0 \tag{2.9}$$

is the configuration of minimal energy. The matter density is everywhere constant, the hamiltonian density is zero.
If we add a phase to this solution:

$$\phi(\vec{x}) = \sqrt{\rho_0}e^{i(\mathcal{E}t - \vec{p}\cdot\vec{x})} \qquad\qquad \vec{A} = 0 \tag{2.10}$$

we find a configuration in which the matter density is still a constant but the energy is not zero anymore. It represents a collective motion of the system as a whole, its energy is:

$$\mathcal{E} = \frac{|\vec{p}|^2}{2m}N \tag{2.11}$$

which is precisely the kinetic energy for a single particle of momentum $\vec{p}$ multiplied by the total number of particles N.

We stress that this is not a local excitation.
In the next section we will study in some details this collective mode with particular interest on the possibility that they could represent persistent supercurrents of our fluid.
In this section we will study the energy spectrum of the small field perturbations of our Maxwell-Chern-Simons theory.
We take the following parameterization:

$$\phi = \sqrt{\rho} e^{i\theta} \tag{2.12}$$

and rewrite lagrangian (2.1) keeping only quadratic terms in the fields. With this choice, and in the gauge $\vec{\nabla}\cdot\vec{A}=0$, equation (2.1) becomes (notice that in this gauge one can put $A_i=\epsilon_{ij}\partial_j\psi$ and therefore one obtains $\int d^2x\ \epsilon_{ij}A_i\partial_0 A_j=0$):

$$\begin{aligned}\mathcal{L} =& \frac{1}{2}g_E\left[(\partial_0 A_i)^2+(\partial_i A_0)^2\right]-\frac{1}{2}g_B\left(\partial_i A_j\right)^2-2\alpha\epsilon_{ij}A_0\partial_i A_j+\\ &+\frac{1}{2m}\left[-\frac{1}{4\rho_0}\left(\partial_i\delta\rho\right)^2-\rho_0\left(\partial_i\theta\right)^2-\rho_0 A_i^2\right]+\theta\partial_0(\delta\rho)+A_0\delta\rho-\frac{\lambda}{2}(\delta\rho)^2\ .\end{aligned} \tag{2.13}$$

From this lagrangian we get the following field equations:

$$\begin{aligned}\frac{\delta\mathcal{L}}{\delta A_0} &= -g_E\triangle A_0-2\alpha\epsilon_{ij}\partial_i A_j+\delta\rho=0\\ \frac{\delta\mathcal{L}}{\delta A_i} &= -g_E\partial_0^2 A_i+g_B\triangle A_i-2\alpha\epsilon_{ij}\partial_j A_0-\frac{\rho_0}{m}A_i=0\\ \frac{\delta\mathcal{L}}{\delta\theta} &= \frac{\rho_0}{m}\triangle\theta+\partial_0(\delta\rho)=0\\ \frac{\delta\mathcal{L}}{\delta(\delta\rho)} &= \frac{1}{4m\rho_0}\triangle\delta\rho-\partial_0\theta+A_0-\lambda\delta\rho=0\ .\end{aligned} \tag{2.14}$$

Multiplying the second of (2.14) by $\epsilon_{ki}\partial_k$ we get:

$$-g_E\partial_0^2 B+g_B\triangle B+2\alpha\triangle A_0-\frac{\rho_0}{m}B=0\ . \tag{2.15}$$

Now multiplying the third by ∂_0 and the fourth by $\triangle$ we get

$$\triangle\dot{\theta}=-\frac{m}{\rho_0}\partial_0^2(\delta\rho)\ , \tag{2.16}$$

and

$$\frac{1}{4m\rho_0}\triangle^2\delta\rho-\triangle\dot{\theta}+\triangle A_0-\lambda\triangle\delta\rho=0\ . \tag{2.17}$$

We can now eliminate θ and A_0 from equations (2.15) and (2.17) by using the first of (2.14) and (2.16) obtaining:

$$\begin{aligned} &\partial_0^2 B - \frac{g_B}{g_E} \triangle B + \frac{4\alpha^2}{g_E^2} B + \frac{\rho_0}{m g_E} B - \frac{2\alpha}{g_E^2} \delta\rho = 0 \\ &\partial_0^2 \delta\rho + \frac{1}{4m^2} \triangle^2 \delta\rho + \frac{\rho_0}{m g_E} \delta\rho - \frac{\lambda \rho_0}{m} \triangle \delta\rho - \frac{2\alpha\rho_0}{m g_E} B = 0 \ . \end{aligned} \tag{2.18}$$

By taking $B = B_0 e^{i(\mathcal{E}t - \vec{p}\cdot\vec{x})}$ and $\delta\rho = \delta\rho_0 e^{i(\mathcal{E}t - \vec{p}\cdot\vec{x})}$ these equations become:

$$\begin{aligned} &\mathcal{E}^2 B_0 - \left(\frac{4\alpha^2}{g_E^2} + \frac{\rho_0}{m g_E} \right) B_0 + \frac{2\alpha}{g_E^2} \delta\rho_0 - \frac{g_B}{g_E} (p_x^2 + p_y^2) B_0 = 0 \\ &\mathcal{E}^2 \delta\rho_0 - \frac{\rho_0}{m g_E} \delta\rho_0 + \frac{2\alpha\rho_0}{m g_E} B_0 - \frac{\lambda\rho_0}{m} (p_x^2 + p_y^2) \delta\rho_0 - \frac{1}{4m^2} (p_x^2 + p_y^2)^2 \delta\rho_0 = 0 \ . \end{aligned} \tag{2.19}$$

Here we are interested in the value of the energy for small $\vec{p}$. In this limit we can write equations (2.19) in the following matricial form:

$$\begin{pmatrix} \mathcal{E}^2 - \frac{4\alpha^2}{g_E^2} - \frac{\rho_0}{m g_E} & \frac{2\alpha}{g_E^2} \\ \frac{2\alpha\rho_0}{m g_E} & \mathcal{E}^2 - \frac{\rho_0}{m g_E} \end{pmatrix} \begin{pmatrix} B_0 \\ \delta\rho_0 \end{pmatrix} = 0 \tag{2.20}$$

Therefore the values of the energy for $\vec{p}=0$ are obtained putting to zero the determinant of the above matrix. In this way we obtain a second order algebraic equation whose solutions are:

$$\mathcal{E}_{1,2}^2 = \frac{2\alpha^2}{g_E^2} + \frac{\rho_0}{m g_E} \pm \frac{2\alpha^2}{g_E^2} \sqrt{1 + \frac{g_E \rho_0}{m\alpha^2}} \ . \tag{2.21}$$

Now a few comments are in order. First notice that $\mathcal{E}_{1,2}^2$ are both positive, and that they do not depend on g_B. Then if $\alpha \to 0$, that is if there is no Chern-Simons term, the two solutions are equal:

$$\mathcal{E}_1 = \mathcal{E}_2 = \sqrt{\frac{\rho_0}{m g_E}} \ . \tag{2.22}$$

If, on the other hand, we take the opposite limit $g_E \to 0$ then only one of the eigenvalues remains finite whereas the other one diverges:

$$\begin{aligned} \mathcal{E}_1 &= \frac{2|\alpha|}{g_E} \to \infty \\ \mathcal{E}_2 &= \frac{\rho_0}{2m|\alpha|} \ . \end{aligned} \tag{2.23}$$

That is, in general there are two propagating degrees of freedom each with its energy gap. In pure Maxwell theory the energy gaps are degenerate. This degeneracy is resolved

by adding the Chern-Simons term. If there is only the Chern-Simons term the theory possesses only one degree of freedom with an energy gap, the other one being frozen. We note that all the gap structure is independent on the value of g_B. We further notice that the presence of the gaps in the energy spectrum depends essentially on the presence of the gauge field in the dynamics of the fluid. We will discuss more accurately this point later in chapter 5.

2.2. Stationary currents

In this section we study the collective motion of the system discussed above and we consider the problem whether it can represent a persistent supercurrent of our fluid. We therefore consider a configuration with the geometry of an annulus which although idealized can be very similar to an actual superconducting device. We take therefore an annulus of radii $r_2 > r_1$ such that $r_2 - r_1 = L$, and we consider a pile of many of these annuli separated by a spacing d, see figure 1a. We assume that $L/r_1 \ll 1$, but still L is macroscopic, that is $L/d \gg 1$ where d is any length of the order of few atomic distances such as the inter-annuli spacing. Furthermore, the total length L_z of the cylinder is supposed to be very large as compared to the radii $r_{1,2}$.

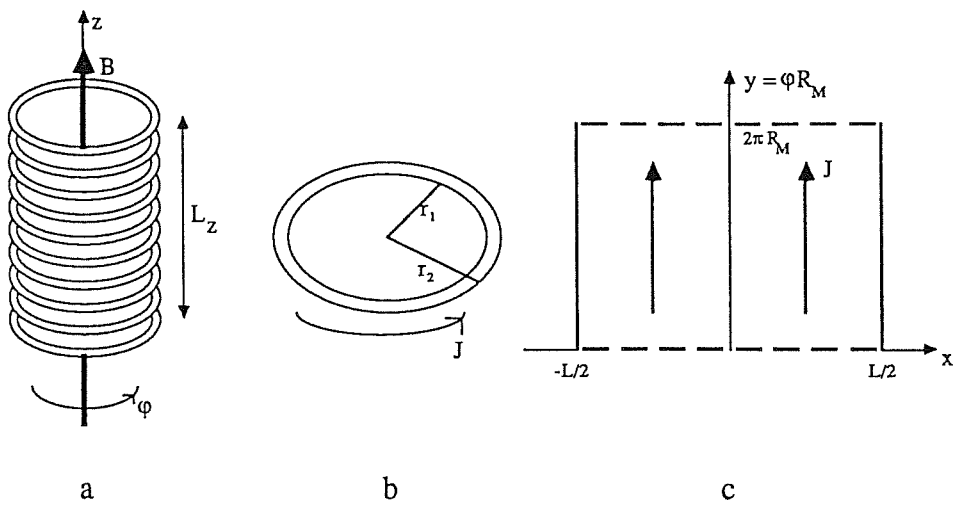

Figure 1

We are interested in studying the possible fluid's current flowing around each annulus, see figure 1b. We furthermore make the simplificatory assumption that this current is uniform with respect to the z coordinate, that it is the same in each annulus. This seems

reasonable if one thinks that the different annuli are not completely decoupled from each other (in which case there appears to be no reason to require the same current), but have some Josephson coupling which can be considered responsible for the correlation between the different annuli.
Thus our cylindrical configuration will act as a solenoid. Later we will compute the three-dimensional true magnetic field inside the solenoid, due to the current.
From the two-dimensional point of view the annulus is equivalent to a strip (see figure 1c) which is finite in the x direction, $-L/2 \leq x \leq L/2$, and periodic in the y direction, $0 \leq y \leq 2\pi R_0$ $\left(\text{with } R_0 = \frac{r_1 + r_2}{2}, \text{remember that in this approximation } L/R_0 \ll 1\right)$.
We consider a possible current induced by a quantized phase for the matter field, as for a vortex:

$$\phi = |\phi| e^{ipy} \tag{2.24}$$

where $p = \frac{n}{R_0}$ is fixed, $n \in \mathbf{Z}$.
Notice that we consider a configuration with cylindrical symmetry. This fact, in the two-dimensional strip notation, means that there is not explicit dependence from the y coordinate, therefore we can take (in the gauge $\vec{\nabla} \cdot \vec{A} = 0$):

$$\begin{aligned} \vec{A} = (A_x, A_y) = \big(0, A(x)\big) \qquad B = \partial_x A \\ \vec{u} = \big(u(x), 0\big) \qquad \delta\rho(x) = \partial_x u(x) \qquad |\phi| = \sqrt{\delta\rho(x) + \rho_0}\ . \end{aligned} \tag{2.25}$$

As we said we assume uniformity in the z direction, so we can write the hamiltonian of the model as:

$$\begin{aligned} \frac{H}{2\pi R_0 L_z} = \int dx \left\{ \frac{1}{2} g_B B^2 - \frac{1}{2m} \phi^\dagger \vec{D}^2 \phi + V(|\phi|) \right\} + \\ + \frac{1}{2g_E} (\delta\rho - 2\alpha B) * \frac{1}{(-\triangle)} * (\delta\rho - 2\alpha B)\ . \end{aligned} \tag{2.26}$$

Here the last term comes from integrating out the auxiliary field A_0 and the symbol $*$ means convolution.
It is convenient to express this hamiltonian as the integral of a local hamiltonian density. To this aim we consider equation (2.6) written in terms of the "electric field" $E_i = \partial_0 A_i - \partial_i A_0$. Thus, in our gauge:

$$\vec{\nabla} \cdot \vec{E} = -\frac{1}{g_E} (\delta\rho - 2\alpha B)\ . \tag{2.27}$$

Furthermore we impose boundary conditions such as to eliminate possible zero modes which do not contribute to the hamiltonian (2.26). This amounts to requiring (because of the uniformity in the y coordinate we can write $\vec{E} = (E(x), 0)$):

$$E(x < -L/2) = E(x > L/2) = 0\ . \tag{2.28}$$

The hamiltonian can then be rewritten as

$$\frac{H}{2\pi R_0 L_z} = \int dx \left\{ \frac{1}{2} g_E E^2 + \frac{1}{2} g_B B^2 - \frac{1}{2m} \phi^\dagger \vec{D}^2 \phi + V(|\phi|) \right\} \tag{2.29}$$

We have to fix completely the boundary conditions. We assume that:

$$A(x < -L/2) = A(x > L/2) = 0 \tag{2.30}$$

that is, we are making the very reasonable assumption that A, which represents in general a propagating excitation of our fluid, is zero outside the sample that is where there is no fluid.

One can also say that, by definition, $\delta\rho = 0$ outside the sample. Since the fluctuation of the particles' total number in a given domain is the flux of $\vec{u}$ through its boundary, and the particles' total number is fixed, the boundary conditions for u are

$$u(x < -L/2) = u(x > L/2) = 0 \ . \tag{2.31}$$

Notice that, by subtracting the irrelevant constant $c_0 = -\frac{\lambda}{2}\rho_0 N$ where N is the fixed particles' total number $N = \int d^2x\, |\phi|^2$, we can rewrite $\int d^2x\, V = \frac{\lambda}{2} \int d^2x\, |\phi|^4$ which vanishes outside the sample.

Thus, keeping into account (2.28), we see that the hamiltonian density vanishes outside the sample, consistently with the fact that it describes the dynamics of the fluid which is confined in the strip.

We can check that the boundary condition (2.28) is the one which correctly ensures that the hamiltonian (2.29) implements the Chern-Simons dynamics in the limit $g_E \to 0$. In fact, the solution of equation (2.27), with the boundary conditions (2.28), (2.30) and (2.31) gives:

$$E(x) = -\frac{1}{g_E} \int_{-\frac{L}{2}}^{x} dx' \delta\rho(x') + \frac{2\alpha}{g_E} A(x) = -\frac{1}{g_E} \left[u(x) - 2\alpha A(x) \right] \ . \tag{2.32}$$

Thus we see that, since finite energy requires $g_E E^2$ to be bounded, one recovers in the limit $g_E \to 0$:

$$A(x) = \frac{1}{2\alpha} u(x) \tag{2.33}$$

which is indeed the solution of the Chern-Simons constraint $B = \frac{1}{2\alpha}\delta\rho$ with the boundary conditions of (2.30) and (2.31).

To this hamiltonian we now add one extra term which plays an essential role in what follows. This term represents the true, three-dimensional electrostatic interaction between the fluctuations of the charged matter. In other words, if there is a fluctuation $\delta\rho$ of the matter, the system will not be in electrostatic equilibrium anymore, for there will be some zones where there is lack of charged matter and others where there is abundance with respect to the neutralizing background. The electrostatic field we are considering here accounts precisely for this effect.

One can of course always suppose that the neutralizing background deforms itself in such a way to compensate all the charge fluctuations and to ensure electrostatic equilibrium. If this is the case one simply has to drop the electrostatic term we are introducing here. But in our non trivial dynamics, which involves the gauge field, it is not at all obvious that the most energetically favourable configuration for the system is that of zero electrostatic field.

All in all here we assume that this electrostatic interaction *is* present. We devote chapter 6 to the discussion of the magnetic properties of the system in absence of the electrostatic term.

This yields a *real* electric field which obeys to the three-dimensional Maxwell equation:

$$\vec{\nabla} \cdot \vec{E}^{em} = e\delta\rho^{(3)} \ , \tag{2.34}$$

where $\delta\rho^{(3)} = \dfrac{\delta\rho}{d}$ is the three dimensional density and e is the electric charge. We can then compute this electrostatic contribution. The three-dimensional Maxwell equation can be written as:

$$\partial_x E^{em}(x) = \frac{e}{d}\delta\rho = \frac{e}{d}\partial_x u \ . \tag{2.35}$$

This equation can be integrated yielding:

$$E^{em} = \frac{e}{d}u \ . \tag{2.36}$$

Therefore the electrostatic contribution to the hamiltonian is

$$\frac{d}{2}\left(\vec{E}^{em}\right)^2 = \frac{e^2}{2d}u^2 \ . \tag{2.37}$$

Thus, after taking everything into account, the hamiltonian of the system can be written as:

$$\begin{aligned}\frac{H}{2\pi R_0 L_z} = \int dx \Big\{ &\frac{1}{2g_E}(u - 2\alpha A)^2 + \frac{1}{2}g_B(\partial_x A)^2 + \frac{1}{2m}(p - A)^2\rho + \\ &+ \frac{1}{2m}(\partial_x|\phi|)^2 + \frac{\lambda}{2}(\partial_x u)^2 + \frac{e^2}{2d}u^2 \Big\} \ .\end{aligned} \tag{2.38}$$

Before going on, it is maybe worth to stress again the difference between $E(x)$ and $E^{em}(x)$. The first one is the two-dimensional "electric field" coming from the internal dynamics of the fluid. The second one is the actual, real, three-dimensional electric field due to electrostatic interaction of the charged matter.

2.3. A heuristic analysis

We perform a heuristic analysis by considering a simplified situation where the matter is uniformly distributed and there is no "magnetic field", that is:

$$\delta\rho = 0 \qquad\qquad B = \partial_x A = 0 \ . \tag{2.39}$$

This, in particular, implies $\rho = \rho_0$ and $\partial_x|\phi| = 0$. With this assumption from equation (2.38) the second, the fourth and the fifth terms drop out and therefore the variation of (2.38) yields the equations:

$$\begin{aligned} \frac{\delta}{\delta A}\left(\frac{H}{2\pi R_0 L_z}\right) &= \frac{2\alpha}{g_E}(2\alpha A - u) + \frac{\rho_0}{m}(A - p) = 0 \\ \frac{\delta}{\delta u}\left(\frac{H}{2\pi R_0 L_z}\right) &= \frac{1}{g_E}(u - 2\alpha A) + \frac{e^2}{d}u = 0 \ . \end{aligned} \tag{2.40}$$

The solution of these equations is (in this heuristic analysis we forget the boundary conditions):

$$\begin{aligned} A_* &= \frac{\dfrac{\rho_0}{m}}{\dfrac{\rho_0}{m} + \dfrac{4\alpha^2 e^2}{d + e^2 g_E}} p \\ u_* &= \frac{2\alpha\rho_0 d}{\rho_0(d + e^2 g_E) + 4m\alpha^2 e^2} p \ . \end{aligned} \tag{2.41}$$

This corresponds to the current density:

$$J = \frac{\rho_0}{m}(p - A) = \frac{\rho_0}{m}\frac{\dfrac{4\alpha^2 e^2}{d + e^2 g_E}}{\dfrac{\rho_0}{m} + \dfrac{4\alpha^2 e^2}{d + e^2 g_E}} p \ . \tag{2.42}$$

Notice that if $e^2 = 0$, that is if there is no electrostatic effect, the density current is zero. Notice also that in the Maxwell limit ($\alpha \to 0$ or $g_E \to \infty$) the current density is still zero. Therefore the current density is different from zero only if there is some Chern-Simons amount in the fluid's dynamics. In particular for the case of pure Chern-Simons , with $\alpha \to \infty$, we recover the maximum value for the current:

$$J \underset{\alpha\to\infty}{\longrightarrow} \frac{\rho_0}{m} p \ . \tag{2.43}$$

2.4. A more detailed analysis

The assumptions of the previous section are physically too restrictive because we have no reason to expect that the actual physical situation have $\delta\rho$ and B equal to zero. Nevertheless in this section we show that a more accurate computation leads substantially to the same results, apart from a correction which is different from zero only in regions very close to the sample's borders.
In order to keep the discussion reasonably transparent, we make the simplificatory assumptions that $\rho_0 \gg |\delta\rho|$ and that $1/m \ll \lambda$. With these assumptions we can write:

$$\rho(p-A)^2 \simeq \rho_0(p-A)^2 \qquad \frac{1}{2m}(\partial_x|\phi|)^2 = \frac{1}{8m\rho}(\partial_x\delta\rho)^2 \simeq 0 \ . \tag{2.44}$$

We stress that our results would hold also in general. In fact, the equilibrium configuration of the fluid, far from the borders, will be the one of the previous section. What happens in details near to the borders will depend on the details of the hamiltonian, and we have chosen to present the simplified discussion based on (2.44).
In this way the field equations now read:

$$\begin{aligned} \frac{\delta}{\delta A}\left(\frac{H}{2\pi R_0 L_z}\right) &= -\partial_x^2 A + \frac{2\alpha}{g_E g_B}(2\alpha A - u) + \frac{\rho_0}{m g_B}(A-p) = 0 \\ \frac{\delta}{\delta u}\left(\frac{H}{2\pi R_0 L_z}\right) &= -\partial_x^2 u + \frac{1}{\lambda g_E}(u - 2\alpha A) + \frac{e^2}{\lambda d}u = 0 \ . \end{aligned} \tag{2.45}$$

These equations can be rewritten in matricial form as follows:

$$(-\mathbf{1}\partial_x^2 + M)\Psi = \Phi \tag{2.46}$$

where $\mathbf{1}$ is the unit two by two matrix, and

$$M = \begin{pmatrix} \mathrm{a} & \mathrm{b} \\ \mathrm{c} & \mathrm{d} \end{pmatrix} = \begin{pmatrix} \dfrac{4\alpha^2}{g_E g_B} + \dfrac{\rho_0}{m g_B} & -\dfrac{2\alpha}{g_E g_B} \\ -\dfrac{2\alpha}{g_E \lambda} & \dfrac{1}{g_E\lambda} + \dfrac{e^2}{\lambda d} \end{pmatrix} \qquad \Psi = \begin{pmatrix} A \\ u \end{pmatrix} \qquad \Phi = \begin{pmatrix} \dfrac{\rho_0}{g_B m}p \\ 0 \end{pmatrix} \ . \tag{2.47}$$

Note that $\det M = \dfrac{\rho_0}{m g_B g_E \lambda} + \dfrac{\rho_0 e^2}{m g_B \lambda d} + \dfrac{4\alpha^2 e^2}{g_E g_B \lambda d} > 0$.
The general solution of equation (2.46) can be written as

$$\Psi(x) = \Psi_0 + \Psi_* \tag{2.48}$$

where

$$\Psi_* = M^{-1}\Phi = \begin{pmatrix} A_* \\ u_* \end{pmatrix} \tag{2.49}$$

is one particular solution, A_* and u_* being given by equation (2.41). Ψ_0 is the general solution of the homogeneous equation

$$(-1\partial_x^2 + M)\Psi = 0 \ . \tag{2.50}$$

The boundary conditions discussed in section 2.2 are $\Psi(-L/2) = \Psi(L/2) = 0$. Therefore we get to:

$$\begin{pmatrix} A(x) \\ u(x) \end{pmatrix} = \frac{\cosh(\mu_1 x)}{\cosh(\mu_1 L/2)} \begin{pmatrix} A_1 \\ u_1 \end{pmatrix} + \frac{\cosh(\mu_2 x)}{\cosh(\mu_2 L/2)} \begin{pmatrix} A_2 \\ u_2 \end{pmatrix} + \begin{pmatrix} A_* \\ u_* \end{pmatrix} \tag{2.51}$$

where

$$\mu_{1,2}^2 = \frac{1}{2}\left(\mathrm{a} + \mathrm{d} \pm \sqrt{(\mathrm{a}-\mathrm{d})^2 + 4\mathrm{bc}}\right) \tag{2.52}$$

are the eigenvalues of the matrix M, which can be proved to be positive. Substituting back in (2.50) we can find the following relation between $u_{1,2}$ and $A_{1,2}$:

$$u_{1,2} = \frac{\mu_{1,2}^2 - \mathrm{a}}{\mathrm{b}} A_{1,2} \ . \tag{2.53}$$

Let us mention the values of $\mu_{1,2}^2$ in some limiting cases. For the case of pure Maxwell, that is $\alpha = 0$, the fields $A(x)$ and $u(x)$ decouple and the two eigenvalues are

$$\mu_1^2 = \frac{\rho_0}{g_B m} \ \text{(relevant for } A) \qquad \mu_2^2 = \frac{1}{\lambda g_E} + \frac{e^2}{\lambda d} \ \text{(relevant for } u) \ . \tag{2.54}$$

In the opposite limit $g_E \to 0$ the relevant field configuration is $u = 2\alpha A$, and this is reflected in the eigenvalues which turn out to be

$$\mu_1^2 \to \infty \qquad \mu_2^2 = \frac{\dfrac{\rho_0}{m} + \dfrac{4e^2\alpha^2}{d}}{g_B + 4\alpha^2\lambda} \ . \tag{2.55}$$

Imposing the boundary conditions, we determine $A_{1,2}$ by:

$$\begin{pmatrix} \dfrac{1}{\mu_1^2 - \mathrm{a}} & \dfrac{1}{\mu_2^2 - \mathrm{a}} \\ \mathrm{b} & \mathrm{b} \end{pmatrix} \begin{pmatrix} A_1 \\ A_2 \end{pmatrix} = -\begin{pmatrix} A_* \\ u_* \end{pmatrix} \ . \tag{2.56}$$

They turn out to be:

$$
\begin{aligned}
A(x) &= A_* + \frac{(\mu_2^2 - \mathrm{a})A_* - \mathrm{b}u_*}{\mu_1^2 - \mu_2^2}\frac{\cosh(\mu_1 x)}{\cosh(\mu_1 L/2)} - \frac{(\mu_1^2 - \mathrm{a})A_* - \mathrm{b}u_*}{\mu_1^2 - \mu_2^2}\frac{\cosh(\mu_2 x)}{\cosh(\mu_2 L/2)} \\
u(x) &= u_* + \frac{(\mu_1^2 - \mathrm{a})(\mu_2^2 - \mathrm{a})A_* - \mathrm{b}(\mu_1^2 - \mathrm{a})u_*}{\mathrm{b}(\mu_1^2 - \mu_2^2)}\frac{\cosh(\mu_1 x)}{\cosh(\mu_1 L/2)} - \\
&\quad - \frac{(\mu_1^2 - \mathrm{a})(\mu_2^2 - \mathrm{a})A_* - \mathrm{b}(\mu_2^2 - \mathrm{a})u_*}{\mathrm{b}(\mu_1^2 - \mu_2^2)}\frac{\cosh(\mu_2 x)}{\cosh(\mu_2 L/2)} \,.
\end{aligned}
\tag{2.57}
$$

This yield a current:

$$
\begin{aligned}
J = \frac{\rho_0}{m}\Bigg[& \frac{\dfrac{4e^2\alpha^2}{d + e^2 g_E}}{\dfrac{\rho_0}{m} + \dfrac{4e^2\alpha^2}{d + e^2 g_E}}\, p - \frac{(\mu_2^2 - \mathrm{a})A_* - \mathrm{b}u_*}{\mu_1^2 - \mu_2^2}\frac{\cosh(\mu_1 x)}{\cosh(\mu_1 L/2)} + \\
& + \frac{(\mu_1^2 - \mathrm{a})A_* - \mathrm{b}u_*}{\mu_1^2 - \mu_2^2}\frac{\cosh(\mu_2 x)}{\cosh(\mu_2 L/2)}\Bigg] \,.
\end{aligned}
\tag{2.58}
$$

Notice that the two eigenvalues can be equal only for $\dfrac{\alpha}{g_E} = 0$ and $\dfrac{\rho_0}{m g_B} = \dfrac{1}{g_E \lambda} + \dfrac{e^2}{\lambda d}$ in which case the matrix M is proportional to the identity. In this case in (2.51) we can write $A_1 = A_2$ and $u_1 = u_2$ with no relation between A_1 and u_1. The boundary conditions give in this case $A_1 = -A_*$ and $u_1 = -u_*$.

Notice that since L is macroscopic, the current density is different from the value found in the previous heuristic analysis only in the small regions (of the order of $\dfrac{1}{\mu} \ll L$) close to the edges of the strip, and the corrections drop exponentially to zero in the bulk of the sample.

We can compute also the total current:

$$
\begin{aligned}
I = \int_{-L/2}^{L/2} dx\, J = \frac{\rho_0}{m}\Bigg[& \frac{\dfrac{4e^2\alpha^2}{d + e^2 g_E}}{\dfrac{\rho_0}{m} + \dfrac{4e^2\alpha^2}{d + e^2 g_E}}\, pL - \frac{(\mu_2^2 - \mathrm{a})A_* - \mathrm{b}u_*}{\mu_1^2 - \mu_2^2}\frac{2}{\mu_1}\tanh(\mu_1 L/2) + \\
& + \frac{(\mu_1^2 - \mathrm{a})A_* - \mathrm{b}u_*}{\mu_1^2 - \mu_2^2}\frac{2}{\mu_2}\tanh(\mu_2 L/2)\Bigg] \,.
\end{aligned}
\tag{2.59}
$$

We see that, apart from the edges corrections, we have:

$$I = I_0 \frac{\dfrac{4e^2\alpha^2}{d+e^2 g_E}}{\dfrac{\rho_0}{m} + \dfrac{4e^2\alpha^2}{d+e^2 g_E}} \tag{2.60}$$

with $I_0 = \dfrac{\rho_0}{m} pL$.
So again in the Maxwell limit we find $I \to 0$ while in the pure Chern-Simons we find $I = I_0$ which is the nominal current.

2.5. Magnetic field

In this section we compute the actual magnetic field present inside the cylinder (see figure 1a) due to the supercurrent computed above.
It is clear that we have to take now a three-dimensional point of view. Our three-dimensional system is now the cylinder embedded in the three-dimensional space. Therefore we will use the cylindrical coordinates (r, φ, z) as in figure 1a. We remind that we consider $L \ll r_{1,2}$ so that the cylinder can be thought of zero thickness and we take its radius to be $R_0 = \dfrac{r_1 + r_2}{2}$.
With these assumptions we have to find what is the correct expression for the three-dimensional density. Let us therefore compute what is the total number N of particles inside the small cylindrical interspace:

$$N = \int dV\, \rho^{(3)} = \int r dr d\varphi dz\, \frac{\rho_0}{d} = \frac{\rho_0}{d} 2\pi L_z \frac{r_2^2 - r_1^2}{2} = \frac{\rho_0}{d} 2\pi L_z L R_0 \,. \tag{2.61}$$

Therefore it is easy to convince oneself that

$$\rho^{(3)} = \frac{\rho_0}{d} L \delta(r - R_0) \tag{2.62}$$

is the correct expression for the three-dimensional density in this thin cylinder approximation.
Furthermore we suppose $L_z \gg R_0$ so that it is possible to keep far from the cylinder's edges and therefore to disregard the edge effects.
With these definitions the three-dimensional current density flowing all round the cylinder is:

$$J_\varphi = \frac{e\rho_0 L}{md} \left[p - eA_\varphi^{em}(r) - A\right] \delta(r - R_0) \,. \tag{2.63}$$

Here $A_\varphi^{em}(r)$ is the electromagnetic vector potential describing the magnetic field produced inside the cylinder. Since we limit ourselves to the region far from the edges of the cylinder, we can assume A_φ^{em} independent of z.
A is the (two-dimensional) vector potential describing the fluid's dynamics on the strip considered in the previous section.
We can reproduce all the computation of the previous section taking into account for A_φ^{em} simply with the substitution $p \to p - eA_\varphi^{em}$. Therefore we now have, instead of (2.41),

$$A = \frac{\dfrac{\rho_0}{m}}{\dfrac{\rho_0}{m} + \dfrac{4\alpha^2 e^2}{d + e^2 g_E}} (p - eA_\varphi^{em}) \ . \tag{2.64}$$

We have neglected the deformation of A very near to the annuli's edges, as discussed in the previous section. Now we use this expression for A to solve Maxwell's equation $\vec{\nabla} \wedge \vec{B}^{em} = \vec{J}$ inside the cylinder (see reference [16]). In cylindrical coordinates this equation reads:

$$-\frac{d}{dr}\left[\frac{1}{r}\frac{d}{dr}\left(rA_\varphi^{em}\right)\right] = J_\varphi \ . \tag{2.65}$$

The solution of this equation can be written in the form

$$A_\varphi^{em} = A_\varphi^{em}(R_0)\left[\frac{r}{2}\Theta(R_0 - r) + \frac{R_0^2}{2r}\Theta(r - R_0)\right] \ . \tag{2.66}$$

Here Θ is the step function. The constant $A_\varphi^{em}(R_0)$ is computed substituting (2.66) in (2.65), and we find

$$A_\varphi^{em} = \frac{e\rho_0^{em}}{m} p \frac{1}{1 + \dfrac{e^2 \rho_0^{em} R_0}{2m}} \left[\frac{r}{2}\Theta(R_0 - r) + \frac{R_0^2}{2r}\Theta(r - R_0)\right] \ , \tag{2.67}$$

where:

$$\rho_0^{em} = \frac{\dfrac{4e^2\alpha^2}{d + e^2 g_E}}{\dfrac{\rho_0}{m} + \dfrac{4e^2\alpha^2}{d + e^2 g_E}} \rho_0 \frac{L}{d} \ . \tag{2.68}$$

Substituting equations (2.64) and (2.67) in (2.63) yields the current density:

$$J_\varphi = \frac{e\rho_0^{em}}{m} \frac{p}{1 + \dfrac{e^2 \rho_0^{em} R_0}{2m}} \delta(r - R_0) \ . \tag{2.69}$$

We can also compute the magnetic field inside the cylinder using the cylindrical coordinate relation $B_z^{em} = \frac{1}{r}\frac{d}{dr}(rA_\varphi^{em})$:

$$B_z^{em} = \frac{e\rho_0^{em}}{m}\frac{p}{1+\frac{e^2\rho_0^{em}R_0}{2m}}\Theta(R_0 - r) \ . \tag{2.70}$$

This result is the same as the one of a solenoid in which the current density (2.69) flows. We can also compute the flux of the magnetic field in the cylinder:

$$\Phi(B_z^{em}) = \pi R_0^2 B_z^{em} = \pi R_0^2 \frac{e\rho_0^{em}}{m}\frac{1}{1+\frac{e^2\rho_0^{em}R_0}{2m}}p \ . \tag{2.71}$$

Remembering that $p = \frac{n}{R_0}$, we see that for $e\rho_0^{em}R_0^2 \to \infty$ we get

$$\Phi(B^{em}) \longrightarrow \frac{2n\pi}{e} \ . \tag{2.72}$$

That is, the total flux is quantized in the above limit. This is of course not surprising since the current that generates this magnetic field is vortex-like, that is have a quantized phase.

We stress that the result for the magnetic field and flux is exactly the same as it would have been obtained for an ordinary superconductor flowing on a cylindrical surface when ρ_0^{em} is its surface density. (It is a general fact for any superconducting current flowing on a cylindrical surface, that the flux quantization is strictly speaking obtained just in the above limit).

Note that ρ_0^{em} vanishes if there is no electrostatic term, that is for $e = 0$. Furthermore it vanishes in the Maxwell limit $g_E \to \infty$ (or $\alpha = 0$) and it is maximal, $\rho_0^{em} = \rho_0\frac{L}{d}$, for $\alpha \to \infty$. Therefore we see again that, in order that our idealized device could work as a superconducting solenoid, there cannot be only a Maxwell dynamics, but the chiral Chern-Simons term must play an essential role.

3. Chiral quantum fluid

We want to draw here the reader's attention to the main results of the previous chapter. First of all notice that without the electrostatic interaction introduced above, no persistent current is possible. Secondly notice that if the intrinsic dynamics of the gauge field is of pure Maxwell then no persistent current is possible: there is need of some Chern-Simons ' amount. Furthermore the current is maximal when the dynamics is of pure Chern-Simons. These facts lead us to consider our quantum fluid with pure Chern-Simons gauge dynamics (for this reason called *chiral*) as a possible theoretical model of some superconducting layered material.
In what follows we will analyze in some detail various features of such a system, and in particular the spectrum, the magnetic properties, and the evidence of chirality.

3.1. The chiral lagrangian

The lagrangian density that we take as a starting point is obtained from (2.1) without the Maxwell terms, that is with $g_E = g_B = 0$:

$$\mathcal{L} = \frac{i}{2}\left(\phi^\dagger\dot{\phi} - \dot{\phi}^\dagger\phi\right) + \frac{1}{2m}\phi^\dagger\vec{D}^2\phi - \alpha\epsilon_{\lambda\mu\nu}A^{CS}_\lambda\partial_\mu A^{CS}_\nu + A^{CS}_0(|\phi|^2 - \rho_0) - \frac{\lambda}{2}(\delta\rho)^2 \ . \quad (3.1)$$

with $\vec{D} = \vec{\nabla} - i\vec{A}^{CS}$.
From this chapter on we will call the gauge potential responsible of the internal dynamics of the fluid $\vec{A}^{CS}$ to make clear its chiral nature and to distinguish it from the gauge potential of the *real* electromagnetic field $\vec{A}^{em}$ that will be introduced in the next chapters.
Integrating out the auxiliary field A^{CS}_0 we find the equation

$$B^{CS} = \frac{1}{2\alpha}\delta\rho \ , \quad (3.2)$$

which can be obtained from (2.6) with $g_E = 0$. In this way the lagrangian density becomes:

$$\mathcal{L} = \frac{i}{2}\left(\phi^\dagger\dot{\phi} - \dot{\phi}^\dagger\phi\right) - \frac{1}{2m}|\vec{D}\phi|^2 - \frac{\lambda}{2}(\delta\rho)^2 = \frac{i}{2}\left(\phi^\dagger\dot{\phi} - \dot{\phi}^\dagger\phi\right) - \mathcal{H} \ . \quad (3.3)$$

Equation (3.2) is the usual Chern-Simons constraint relation between the Chern-Simons "magnetic field " and the matter density. This constraint is the basis on which lies the mean-field description of anyons, see references [17] [8] [9] [18] [10]. Notice that here there is an important difference. The Chern-Simons "magnetic field" is proportional to the density

fluctuation rather than to the actual matter density. With our choice, as a consequence of the conservation of the total number of particles, we have consistently:

$$\int d^2x\, \vec{\nabla} \wedge \vec{A}^{CS} = 0 \ . \tag{3.4}$$

The electrostatic term will be neglected in this chapter. It will be considered again when we will discuss the magnetic properties where it will play an essential role.
We write here the resulting hamiltonian :

$$H = \int d^2x \left\{ \frac{1}{2m} |\vec{D}\phi|^2 + \frac{\lambda}{2}(\delta\rho)^2 \right\} \ . \tag{3.5}$$

Formally the same effective lagrangian density as (3.1) has been introduced in references [19] [20] [21] [22] [23] to provide a possible description of the Fractional Quantum Hall Effect. Here, however, the physical situation is totally different since here we do not have a strong, uniform, external magnetic field orthogonal to the surface to deal with, but are interested essentially to the properties of the quantum fluid per se.

3.2. Small deformation approach

We start analyzing the lagrangian (3.3) within a small deformation approach. We are going to compute the spectrum of the small fluctuations and the local currents originated by them. We will see that in these currents appear the chiral property of the system.
We take the following parameterization

$$\phi = \sqrt{\rho} e^{i\theta} \ . \tag{3.6}$$

From equations $\vec{\nabla} \cdot \vec{u} = \delta\rho$ and $\vec{\nabla} \wedge \vec{A}^{CS} = \frac{1}{2\alpha}\delta\rho$, see (2.3) and (3.2), we obtain a duality relation between $\vec{u}$ and $\vec{A}^{CS}$, that is:

$$A_i^{CS} = -\frac{1}{2\alpha}\epsilon_{ij} u_j \ . \tag{3.7}$$

Notice that the irrotational condition for $\vec{u}$, $\vec{\nabla} \wedge \vec{u} = 0$, corresponds to the gauge condition $\vec{\nabla} \cdot \vec{A}^{CS} = 0$. With these notations the three terms contributing to (3.3) become (keeping only quadratic terms).
First:

$$\frac{i}{2}\left(\phi^\dagger \dot{\phi} - \dot{\phi}^\dagger \phi\right) = -\rho\dot{\theta} = \theta\dot{\rho} = \theta\partial_0\delta\rho = \theta\vec{\nabla} \cdot \dot{\vec{u}} \ , \tag{3.8}$$

where we have used integration by parts.
Second:

$$\begin{aligned}\frac{1}{2m}|\vec{D}\phi|^2 =& \frac{1}{2m}\left[\left(\vec{\nabla}\sqrt{\rho}\right)^2 + \left(\vec{\nabla}\theta\right)^2\rho + \frac{1}{4\alpha^2}\vec{u}^2\rho + \frac{1}{\alpha}\epsilon_{ij}\partial_i\theta u_j\rho\right] \simeq \\ \simeq& \frac{1}{2m}\left[\frac{1}{4\rho_0}(\triangle\vec{u})^2 + \rho_0\left(\vec{\nabla}\theta\right)^2 + \frac{\rho_0}{4\alpha^2}\vec{u}^2\right] ,\end{aligned} \tag{3.9}$$

where we used the following approximations:

$$\vec{\nabla}\rho = \triangle\vec{u} \simeq 2\sqrt{\rho_0}\vec{\nabla}\sqrt{\rho} \quad (\vec{\nabla}\theta)^2\rho \simeq \rho_0(\vec{\nabla}\theta)^2 \quad \vec{u}^2\rho \simeq \rho_0\vec{u}^2 \quad \epsilon_{ij}\partial_i\theta u_j\rho \simeq \rho_0\theta\epsilon_{ij}\partial_i u_j = 0 . \tag{3.10}$$

Third:

$$\frac{\lambda}{2}(\delta\rho)^2 = \frac{\lambda}{2}\left(\vec{\nabla}\cdot\vec{u}\right)^2 . \tag{3.11}$$

Putting it all together we find:

$$\mathcal{L} = \theta\vec{\nabla}\cdot\dot{\vec{u}} - \frac{1}{2m}\left[\frac{1}{4\rho_0}(\triangle\vec{u})^2 + \rho_0\left(\vec{\nabla}\theta\right)^2 + \frac{\rho_0}{4\alpha^2}\vec{u}^2\right] - \frac{\lambda}{2}\left(\vec{\nabla}\cdot\vec{u}\right)^2 . \tag{3.12}$$

Performing the variation with respect to θ we find

$$\vec{\nabla}\cdot\dot{\vec{u}} + \frac{\rho_0}{m}\triangle\theta = 0 \tag{3.13}$$

which can be regarded as a continuity equation

$$\partial_0\rho + \vec{\nabla}\cdot(\rho\vec{V}) = 0 \tag{3.14}$$

provided we identify the velocity $\vec{V} = \frac{\vec{\nabla}\theta}{m}$. From (3.13) we obtain

$$\vec{\nabla}\theta = \frac{m}{\rho_0}\dot{\vec{u}} \tag{3.15}$$

which, substituted back in (3.12), yields:

$$\mathcal{L} = \frac{m}{2\rho_0}\dot{\vec{u}}^2 - \frac{1}{8m\rho_0}(\triangle\vec{u})^2 - \frac{\rho_0}{8m\alpha^2}\vec{u}^2 - \frac{\lambda}{2}\left(\vec{\nabla}\cdot\vec{u}\right)^2 . \tag{3.16}$$

Parameterizing $\vec{u} = \vec{u}_0 e^{i(\mathcal{E}t - \vec{p}\cdot\vec{x})}$ we find the spectrum of the small deformations:

$$\mathcal{E}^2 = \frac{\rho_0^2}{4\alpha^2 m^2} + \frac{\lambda\rho_0}{m}|\vec{p}|^2 + \frac{1}{4m^2}|\vec{p}|^4 . \tag{3.17}$$

Notice that the minimum of the energy, for $|\vec{p}| = 0$, is not zero. We therefore have a gap:

$$\mathcal{E}(0) = \frac{\rho_0}{2\alpha m} \equiv \mathcal{E}_{GAP} . \tag{3.18}$$

This is, of course, the same gap we found in the previous chapter discussing the pure Chern-Simons limit, see equation (2.23).
In these considerations we have disregarded the contribution to the spectrum of the electrostatic term. We will compute it at the end of this chapter.

3.2.1. Currents

In this subsection we compute the currents due to the small deformations studied above. They are localized currents, and should not be confused with the stationary currents studied in the previous chapter. A straightforward calculation yields:

$$\begin{aligned} J_x &= \frac{1}{2mi}\left[\phi^\dagger D_x\phi - (D_x\phi)^\dagger\phi\right] = \frac{\rho_0}{m}\left(\partial_x\theta + \frac{1}{2\alpha}u_y\right) = -\dot{u}_x + \mathcal{E}_{GAP}u_y \\ J_y &= \frac{1}{2mi}\left[\phi^\dagger D_y\phi - (D_y\phi)^\dagger\phi\right] = \frac{\rho_0}{m}\left(\partial_y\theta - \frac{1}{2\alpha}u_x\right) = -\dot{u}_y - \mathcal{E}_{GAP}u_x \end{aligned} \tag{3.19}$$

where we have used (3.15). Parameterizing $u_x = u_{0x}\cos(\mathcal{E}t + \varphi_x)$, $u_y = u_{0y}\cos(\mathcal{E}t + \varphi_y)$ we find that

$$\begin{aligned} \dot{J}_x &= -\ddot{u}_x + \mathcal{E}_{GAP}\dot{u}_y \underset{\mathcal{E}\to\mathcal{E}_{GAP}}{\longrightarrow} -\mathcal{E}_{GAP}J_y \\ \dot{J}_y &= -\ddot{u}_y - \mathcal{E}_{GAP}\dot{u}_x \underset{\mathcal{E}\to\mathcal{E}_{GAP}}{\longrightarrow} \mathcal{E}_{GAP}J_y \ . \end{aligned} \tag{3.20}$$

Notice that if the energy of the small excitation is equal to the gap the above equations are solved by

$$\begin{aligned} J_x &= J_0\cos(\mathcal{E}_{GAP}t + \varphi_0) \\ J_y &= J_0\sin(\mathcal{E}_{GAP}t + \varphi_0) \ . \end{aligned} \tag{3.21}$$

This means that an excitation with the energy of the gap carries a current which is circularly polarized with a definite direction of rotation. This direction depends on the sign of the Chern-Simons coupling constant α, that is is reversed by a parity or time reversal transformation. In other words we have found a current that exhibits the chiral property of our system as long as the energies involved are of the order of the gap.
Later we will see another manifestation of the chiral property which is present only if the energy involved is that of the gap. This is an optical activity of our fluid, which can act as a circular polarizer for an electromagnetic wave having the energy of the gap. It will be discussed in detail in chapter 7.

3.3. Vortices

Now we turn to the study of the vortex excitations of our fluid, that is the vortex configuration that minimize the hamiltonian (3.5). Vortices have been much studied in the literature (see for example the pioneering work of Nielsen and Olesen [24]). We will follow the method of references [25] [26] [27] [28] [29] [30] based on the classical work of Bogomol'nyi [31]. For other works on vortices in relativistic and non-abelian Chern-Simons theory see references [32] [33] [34] [35].

Vortices are the classical static solutions of the form (since a vortex has a circular symmetry here we use the polar circular coordinates r, θ):

$$\phi(r,\theta) = f(r)e^{in\theta} \qquad \lim_{r\to\infty} f^2(r) = \rho_0 \tag{3.22}$$

where $n \in \mathbf{Z}$ is a topological invariant corresponding to the vorticity, that is how many times the vortex winds round; the elementary vortex has $|n| = 1$. Now since in polar coordinates we have:

$$B^{CS} = \frac{1}{r}\partial_r(rA_\theta^{CS}) - \partial_\theta A_r^{CS} \tag{3.23}$$

we can choose for the gauge field the form (see equation (3.2)):

$$\begin{cases} A_r^{CS} = 0 \\ A_\theta^{CS} = \dfrac{1}{2\alpha}\dfrac{1}{r}\displaystyle\int_0^r dr' r' \delta\rho(r') \ . \end{cases} \tag{3.24}$$

With this choice the hamiltonian becomes:

$$H = \int d^2r \left\{ \frac{1}{2m}\left[\left(\frac{d}{dr}f\right)^2 + \frac{1}{r^2}(n - rA_\theta^{CS})^2 f^2\right] + \frac{\lambda}{2}(\delta\rho)^2 \right\} \tag{3.25}$$

from this equation requiring the energy to be finite, we get the following constraint on the asymptotic behaviour of A_θ^{CS}

$$\lim_{r\to\infty} A_\theta^{CS}(r) = \frac{n}{r} \to 0 \ . \tag{3.26}$$

For our particular case this yields:

$$\frac{1}{2\alpha}\int_0^\infty dr\, r\, \delta\rho = n \ , \tag{3.27}$$

which is nothing but the quantization of the magnetic flux in integer factors of 2π.
The problem now is to minimize the total energy; for this purpose it is useful the following identity [27] [28]:

$$|\vec{D}\phi|^2 = |(D_x \pm iD_y)\phi|^2 \pm m\vec{\nabla}\wedge\vec{J} \pm B|\phi|^2 \tag{3.28}$$

here $\vec{J}$ is the usual current

$$\vec{J} = \frac{1}{2mi}\left[\phi^\dagger \vec{D}\phi - \phi(\vec{D}\phi)^\dagger\right] \ . \tag{3.29}$$

Then we have:

$$H = \int d^2r \left\{ \frac{1}{2m}|(D_x \pm iD_y)\phi|^2 \pm \frac{1}{2}\vec{\nabla} \wedge \vec{J} \pm \frac{1}{2m}B^{CS}|\phi|^2 + \frac{\lambda}{2}(\delta\rho)^2 \right\} . \tag{3.30}$$

Using (3.2) we can rewrite the third term as:

$$\frac{1}{2m}B^{CS}|\phi|^2 = \frac{1}{4m\alpha}(\delta\rho)^2 + \frac{\rho_0}{2m}\vec{\nabla} \wedge \vec{A}^{CS} . \tag{3.31}$$

So we are left with:

$$H = \int d^2r \left\{ \frac{1}{2m}|(D_x \pm iD_y)\phi|^2 \pm \frac{1}{2}\vec{\nabla} \wedge \left(\vec{J} \pm \frac{\rho_0}{m}\vec{A}^{CS}\right) + \left(\frac{\lambda}{2} \pm \frac{1}{4m\alpha}\right)(\delta\rho)^2 \right\} . \tag{3.32}$$

Let us compute the contribution of the second term:

$$\frac{1}{2}\int d^2r\, \vec{\nabla} \wedge \left(\vec{J} + \frac{\rho_0}{m}\vec{A}^{CS}\right) = \frac{1}{2}r \int d\theta\, \frac{\rho_0}{m}\frac{n}{r} = \frac{\pi\rho_0}{m}n , \tag{3.33}$$

where we used the fact that $\int d^2r\, \vec{\nabla} \wedge \vec{J} = 0$. Therefore the hamiltonian becomes:

$$H = \pm\frac{\pi\rho_0}{m}n + \int d^2r \left\{ \frac{1}{2m}|(D_x \pm iD_y)\phi|^2 + \left(\frac{\lambda}{2} \pm \frac{1}{4m\alpha}\right)(\delta\rho)^2 \right\} . \tag{3.34}$$

From this expression we can learn several things. Firstly we note that the hamiltonian is positive definite, see equation (3.5). Here we will always study the case where $\frac{\lambda}{2} \geq \frac{1}{4m\alpha}$, the other range of parameter being related to the studies on the FQHE cited above. Therefore the integral on the r.h.s. of equation (3.34) is positive or zero. So we derive the inequality:

$$H \geq \frac{\pi\rho_0}{m}|n| \geq \frac{\rho_0}{2m|\alpha|} = \mathcal{E}_{GAP} \tag{3.35}$$

as long as we assume $|\alpha| \geq \frac{1}{2\pi|n|}$*. So we have found that not only the small deformations but also the "big" excitations, like the vortices, have energies over the gap $\mathcal{E}_{GAP}$.
Let us now study in more detail the special case $\lambda = \frac{1}{2m\alpha}$ and $n < 0$. In this case the equations simplify because the total energy becomes:

$$\mathcal{E} = \frac{\pi\rho_0}{m}|n| + \frac{1}{2m}\int d^2r\, |(D_x - iD_y)\phi|^2 . \tag{3.36}$$

* If one wants to relate (3.3) to the anyon mean-field theory, one finds that the filling is given by $4\pi|\alpha|$. So we see that this assumption is always satisfied for integer filling greater than 1. We discuss in some detail the relation between (3.3) and the anyon mean-field theory in appendix A.

This energy is minimal for:

$$(D_x - iD_y)\phi = 0 \ , \tag{3.37}$$

and its minimal value is

$$\mathcal{E}_{MIN} = \frac{\pi\rho_0}{m}|n| \ . \tag{3.38}$$

Following Jackiw and Weinberg [27] we call equation (3.37) self-dual condition.
Let us now solve the equation (3.37). In polar coordinates it is written:

$$\frac{\partial f}{\partial r} + \frac{n}{r}f - A_\theta^{CS} f = 0 \ . \tag{3.39}$$

If we introduce the auxiliary variable

$$a = -n + rA_\theta^{CS} \ , \tag{3.40}$$

having the properties:

$$a(0) = -n > 0 \qquad\qquad \lim_{r\to\infty} a(r) = 0 \ , \tag{3.41}$$

equation (3.39) is equivalent to the system:

$$\begin{cases} \dfrac{d}{dr}f = \dfrac{1}{r}af \\ \dfrac{d}{dr}a = -\dfrac{1}{2\alpha}r\left(f^2 - \rho_0\right) \ . \end{cases} \tag{3.42}$$

This non-linear couple of differential equations has no analytic solution; so we have solved it numerically with DO2GAF-NAG Fortran Library Routine and verified the agreement of the solution with the previous discussion.
In the case of $n > 0$, the equations cannot be reduced to first order and the bound cannot be satisfied as an equality. We will study this case by a variational method which confirms that the vortex energy for $n = +|n|$ is in fact higher than that for $n = -|n|$. This fact should be expected since the opposite signs of n are connected by a parity transformation, but our lagrangian density (3.1) is not parity invariant, so vortices that differ only for the sign of n cannot have the same energy.

3.3.1. Variational analysis

Above we have found an exact vortex solution obeying the self-dual condition (3.37) and having the energy (3.38). In order to further investigate the general case we go through a variational analysis based on the following ansatz

$$rA_\theta^{CS}(r) = n\left[1 - \left(1 + \frac{\zeta^2 r^2}{2}\right)e^{-\omega r^2}\right] \ . \tag{3.43}$$

Minimizing the energy (3.25) with respect to the parameters ζ and ω. Correspondently we get for $f(r)$, see equation (3.22), imposing the condition $f(0)=0$ which yields the relation $\zeta^2=2\omega+\frac{\rho_0}{2n\alpha}$ between the parameters,

$$f^2(r) = \rho_0 - \left(\rho_0 - 2n\alpha\zeta^2\omega r^2\right) e^{-\omega r^2} \ . \tag{3.44}$$

In the minimization program we have taken $|n| = 1$, $\lambda = \frac{1}{2m\alpha}$, $\alpha = \frac{1}{2\pi}$ to compare the result with the minimum find above, see equation (3.35).
For $n<0$ we have found $E_{min}=6.44\,\frac{\rho_0}{2m}$ which is very close ($6.44\simeq 2\pi$) to the exact result, i.e. the gap $\mathcal{E}_{GAP}$.
For $n>0$ we have found $E_{min}=20.64\,\frac{\rho_0}{2m}$ which is quite above the gap.
Notice that the variation in the number of the particles due to these vortices is:

$$\delta N = \int d^2r\,\delta\rho = \int d^2r\,\left(f^2(r) - \rho_0\right) = \int d^2x\,\left[(2n\alpha\zeta^2\omega r^2 - \rho_0)e^{-\omega r^2}\right] = 4\pi n\alpha \ . \tag{3.45}$$

So, in order that the total number of particles is preserved it is necessary that the total vorticity of the system is zero, this means that for a lack of matter due to the presence of an antivortex in some place there must be a corresponding vortex somewhere else.

3.3.2. Currents

In this subsection we compute the electric current density and the total current due to the vortex for $n<0$.
From (3.29) using equation (3.39) we get:

$$\begin{cases} J_r = 0 \\ J_\theta = -\frac{e}{m} f \frac{d}{dr} f \ . \end{cases} \tag{3.46}$$

The total current I passing in the plane is equal to

$$\begin{aligned} I = \int d\vec{s}\cdot\vec{J} = \int_0^\infty dr\, J_\theta(r) = -\frac{e}{m}\int_0^\infty dr\, f\frac{d}{dr}f = -\frac{e}{2m}\int_0^\infty dr\,\frac{d}{dr}\rho = \\ = -\frac{e}{2m}\left[\rho(\infty) - \rho(0)\right] = -\frac{e}{2m}\rho_0 \ . \end{aligned} \tag{3.47}$$

This current can be interpreted as the Hall current of a QHE!
To see this fact let us consider the following hamiltonian:

$$H = |n|\frac{\pi\rho_0}{m} + \frac{1}{2m}\int d^2r\,\left[|\vec{D}\phi|^2 + eB|\phi|^2\right] \tag{3.48}$$

where $B = \frac{1}{2\alpha e}\delta\rho$. It is straightforward to prove that this hamiltonian is equivalent to our original hamiltonian with $\lambda = \frac{1}{2m\alpha}$. In this form we can interpret the second term in curly brackets in (3.48) as an interaction term between the electric potential $V = \frac{1}{2m}B$ and the electric charge density $e|\phi|^2$. To such a potential will correspond the electric field $\vec{E} = -\vec{\nabla}V$ which in polar coordinates reads:

$$\begin{cases} E_r = -\frac{\partial V}{\partial r} = -\frac{1}{2m}\frac{\partial B}{\partial r} = -\frac{1}{2m\alpha e} f \frac{d}{dr} f = \frac{1}{2\alpha e^2} J_\theta \\ E_\theta = -\frac{1}{r}\frac{\partial V}{\partial \theta} = 0 \ . \end{cases} \tag{3.49}$$

From the first of the (3.49) we read the value of the Hall conductivity $\sigma = \frac{J_\theta}{E_r}$:

$$\sigma = 2\alpha e^2 \ . \tag{3.50}$$

With reference to the footnote in the previous section, if we call $\kappa = 4\pi\alpha$ the integer filling of the anyon mean-field theory we recover the Hall conductivity in the usual form $\sigma = \kappa \frac{e^2}{2\pi}$.

3.4. Summary of the spectrum

In this section we summarize the spectrum of our chiral fluid computing in particular the correction to the energy spectrum due the presence of the disregarded electrostatic term.

Notice first of all, using the three-dimensional equations: $\frac{e}{d}\delta\rho(\vec{x}) = \vec{\nabla}\cdot\vec{E}^{em}(\vec{x})$ and that $\triangle\frac{1}{|\vec{x}|} = 4\pi\delta^{(3)}(\vec{x})$, we can rewrite the electrostatic term in the form:

$$\frac{d}{2}(\vec{E}^{em})^2(\vec{x}) = \frac{e^2}{8\pi}\delta\rho(\vec{x})\int d^2x' \frac{1}{|\vec{x}-\vec{x}'|}\delta\rho(\vec{x}') = -\frac{e^2}{2\pi}\triangle\vec{u}\int d^2x' \frac{1}{|\vec{x}-\vec{x}'|}\vec{u}(\vec{x}') \ . \tag{3.51}$$

Writing $\vec{u}(\vec{x}) = \vec{u}_0 e^{i(\mathcal{E}t - \vec{p}\cdot\vec{x})}$, the integral can be rewritten as:

$$\vec{u}_0 \int d^2x' \frac{1}{|\vec{x}-\vec{x}'|} e^{i(\mathcal{E}t-\vec{p}\cdot\vec{x}')} = \vec{u}_0 e^{(\mathcal{E}t-\vec{p}\cdot\vec{x})}\int d^2x' \frac{1}{|\vec{x}-\vec{x}'|} e^{i\vec{p}\cdot(\vec{x}-\vec{x}')} = 2\pi\frac{1}{|\vec{p}|}\vec{u}(\vec{x}) \ . \tag{3.52}$$

Therefore:

$$\frac{e^2}{8\pi}\delta\rho(\vec{x})\int d^2x' \frac{1}{|\vec{x}-\vec{x}'|}\delta\rho(\vec{x}') = -\frac{e^2}{4}\frac{1}{|\vec{p}|}\vec{u}(\vec{x})\triangle\vec{u}(\vec{x}) = \frac{e^2}{4}|\vec{p}|\vec{u}^2(\vec{x}) = e^2\alpha^2|\vec{p}|\left(\vec{A}^{CS}\right)^2(\vec{x}) \ . \tag{3.53}$$

Thus we have found that the dispersion law of the electrostatic term is linear in $|\vec{p}|$. Therefore we can now write the correct dispersion law taking into account also the electrostatic term:

$$\mathcal{E} = \sqrt{\mathcal{E}_{GAP}^2 + \frac{e^2\rho_0}{2m}|\vec{p}| + \frac{\rho_0\lambda}{m}|\vec{p}|^2 + \frac{1}{4m^2}|\vec{p}|^4} \ , \tag{3.54}$$

which for small $|\vec{p}|$ becomes:

$$\mathcal{E} \simeq \mathcal{E}_{GAP} + \frac{e^2\alpha}{2d}|\vec{p}| \ . \tag{3.55}$$

That is the dispersion relation of the energy spectrum is not the one of the standard superfluids which is linear in$|\vec{p}|$, for small $|\vec{p}|$, like happens in the standard superfluids. Here we have something new: *the gap.*

For larger values of $|\vec{p}|$ it is possible to have a roton excitation (see references [19] [20] [21] [22]) which can be explained as a Coulomb interaction between vortices.

In fact, the Coulomb interaction gives an additional positive contribution to the energy, namely the electrostatic energy due to the density fluctuation of a charged fluid. This electrostatic energy is obviously positive for any density fluctuation and in particular for the vortex-antivortex configurations. Therefore, in conclusion, the roton part of the spectrum will correspond to an energy higher than the lower bound of a vortex-antivortex configuration, that is twice the gap $\mathcal{E}_{GAP}$. In figure 2 we report the qualitative plot of the energy spectrum versus the momentum. In the case considered in reference [22] the vortices are assumed to appear in the lowest Landau level of a Hall system, whereas the gap of the small deformations is due to excitations to the higher Landau levels. Thus, in this case the vortices can have an energy less that the gap. The case studied in reference [22] would correspond in our formalism to the range of values $\frac{\lambda}{2} < \frac{1}{4m\alpha}$.

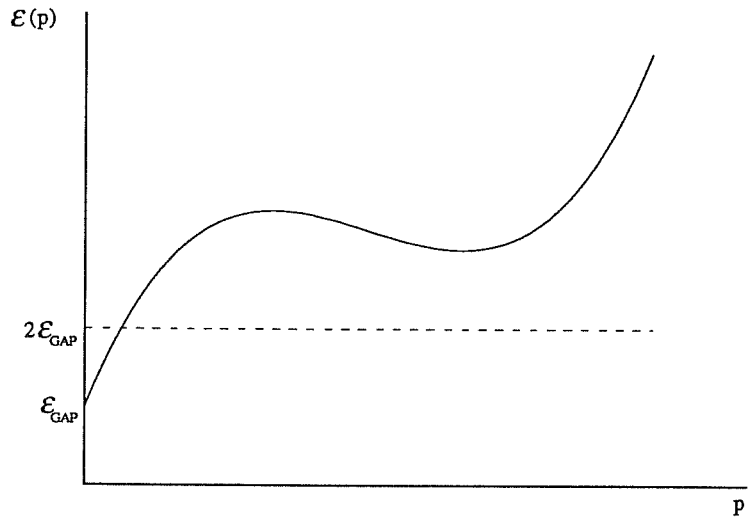

Figure 2

4. Comment on Chern-Simons and Maxwell vortices

In this chapter, before studying the magnetic properties of our chiral fluid, we want to make a side remark on some properties of the vortex-like solutions of the pure Chern-Simons theory and the pure Maxwell theory. Let us parameterize, like in the previous chapter, the vortex configuration in the following way:

$$\phi(r,\theta) = f(r)e^{in\theta} \qquad \lim_{r\to\infty} f^2(r) = \rho_0 \ . \tag{4.1}$$

We will consider in particular the parity **P** and the time reversal **T** transformations. In two spacial dimensions the parity **P** transformation is simply the reflection of one of the axes (a reflection of both axes would in fact lead to a simple rotation of frame). Here we will, for instance, consider the x-axis. This, in polar coordinates, reads:

$$\begin{cases} r \to r \\ \theta \to \pi - \theta \ . \end{cases} \tag{4.2}$$

On the other hand the **T** transformation changes the sign of the time coordinate and takes the complex conjugation of the scalar fields. Actually in our considerations we refer only to static configurations therefore the time coordinate plays no role. We nevertheless observe that both for **P** and **T** transformations the vortex (4.1) transforms as

$$\phi(r,\theta) = f(r)e^{in\theta} \to (-1)^n f(r)e^{-in\theta} \ , \tag{4.3}$$

that is **P** and **T** connect the topological classes that differ by the sign of the vorticity.
We expect therefore that in a chiral theory vortex solutions that differ by the sign of the vorticity will be inequivalent. Indeed we have found in the previous chapter that they have different energy.
In the Maxwell theory instead, being **P** and **T** invariant, we expect a perfect symmetry of the vortex solutions that differ only for the sign of n. This is exactly what we will show in this chapter. Furthermore we will show that the vortex solutions of two different Chern-Simons theories connected by a parity or time-reversal transformation are both solutions of the same Maxwell theory with a convenient choice of some parameters.

4.1. Chiral theory

The first hamiltonian we will study is the same we have studied in the previous chapter, see equation (3.5):

$$H = \int d^2r \left\{ \frac{1}{2m}|\vec{D}\phi|^2 + \frac{\lambda}{2}(\delta\rho)^2 \right\} \ , \tag{4.4}$$

where

$$\vec{D}=\vec{\nabla}-i\vec{A}^{CS} \qquad B^{CS}=\vec{\nabla}\wedge\vec{A}^{CS}=\frac{1}{2\alpha}\delta\rho\ . \tag{4.5}$$

Here we will briefly recall the previous result for ease of reading.
We have found an exact vortex solution for this hamiltonian for the case of $n<0$ and with the special value $\lambda=\frac{1}{2m\alpha}$.
In this way we found that the vortex is the solution of the self-dual equation, see equation (3.37):

$$(D_x-iD_y)\phi=0 \tag{4.6}$$

which corresponds to the energy, (3.38):

$$\mathcal{E}_{MIN}=\frac{\pi\rho_0}{m}|n|\ . \tag{4.7}$$

We also recall that in polar coordinates equation (4.6) reads, (3.39):

$$\frac{d}{dr}f+\frac{n}{r}f-A_\theta^{CS}f=0 \tag{4.8}$$

and that introducing the auxiliary variable, (3.40):

$$a(r)=-n+rA_\theta^{CS}(r) \tag{4.9}$$

with the properties: $a(0)=-n>0$, $a(\infty)=0$, we can rewrite (4.8) as, (3.42):

$$\begin{cases} \frac{d}{dr}f=\frac{1}{r}af \\ \frac{d}{dr}a=\frac{1}{2\alpha}r(f^2-\rho_0) \end{cases} \tag{4.10}$$

In this form has been solved as already discussed in the previous chapter.
In the previous chapter we also explained how the same hamiltonian (4.4) admits also vortices with $n>0$. However their energy is not minimal like (4.7) and they will not be solutions of a first order equation like (4.6).

4.1.1. Case with $n>0$

Consider now a *different* theory obtained from the one studied so far by a $\mathbf{P(T)}$ transformation.
In this new theory B^{CS}, being a pseudovector, changes sign so we have:

$$B^{CS}=\vec{\nabla}\wedge\vec{A}^{CS}=-\frac{1}{2\alpha}\delta\rho\ . \tag{4.11}$$

Therefore in the place of (3.32),using the same identity (3.28), now we have:

$$H = \int d^2r \left\{ \frac{1}{2m} |(D_x \pm iD_y)\phi|^2 \pm \frac{1}{2}\vec{\nabla} \wedge \left(\vec{J} \pm \frac{\rho_0}{m}\vec{A}^{CS}\right) + \left(\frac{\lambda}{2} \mp \frac{1}{4m\alpha}\right)(\delta\rho)^2 \right\} =$$
$$= \pm\frac{\pi\rho_0}{m}n + \int d^2r \left\{ \frac{1}{2m} |(D_x \pm iD_y)\phi|^2 + \left(\frac{\lambda}{2} \mp \frac{1}{4m\alpha}\right)(\delta\rho)^2 \right\} . \tag{4.12}$$

With the same value of λ, taking $n > 0$ and choosing the upper sign, equation (4.12) becomes:

$$H = \frac{\pi\rho_0}{m}n + \frac{1}{2m}\int d^2r \; |(D_x + iD_y)\phi|^2 \; . \tag{4.13}$$

This is minimal if the following equation is satisfied:

$$(D_x + iD_y)\phi = 0 \tag{4.14}$$

which can be obtained from (4.6) by a $\mathbf{P(T)}$ transformation, and corresponds to an energy equal to (4.7).
In polar coordinates (4.14) reads:

$$\frac{d}{dr}f - \frac{n}{r}f + A_\theta^{CS}f = 0 \; . \tag{4.15}$$

Introducing the auxiliary variable:

$$b(r) = n - rA_\theta^{CS}(r) \tag{4.16}$$

with the properties: $b(0)=n>0$, $b(\infty)=0$ we get exactly the same equations as (4.10):

$$\begin{cases} \dfrac{d}{dr}f = \dfrac{1}{r}bf \\ \dfrac{d}{dr}b = \dfrac{1}{2\alpha}r(f^2 - \rho_0) \; . \end{cases} \tag{4.17}$$

So we have checked that two chiral theories connected by a $\mathbf{P(T)}$ transformation admit the same vortex solutions with $n \to -n$.
We will show in the next section that the $\mathbf{P(T)}$ invariant Maxwell theory possesses both kinds of solutions with $n<0$ and with $n>0$, where in both cases the field ϕ satisfies a first order equation like (4.6) or (4.14).

4.2. Maxwell case

Here our starting point is the following Maxwell hamiltonian:

$$H = \int d^2r \left\{ \frac{1}{4} g_B F_{ij} F_{ij} + \frac{1}{2m} |\vec{D}\phi|^2 + \frac{\lambda}{2} (\delta\rho)^2 \right\} . \tag{4.18}$$

Notice that since now the theory is true Maxwell electrodynamics in two dimensions, we redefine $B^{CS} = \vec{\nabla} \wedge \vec{A}^{CS} \to B^{em} = \vec{\nabla} \wedge \vec{A}^{em}$.
Using the identity (3.28) this hamiltonian can be rewritten as:

$$H = \int d^2r \left\{ \frac{1}{4} g_B F_{ij} F_{ij} + \frac{1}{2m} |(D_x \pm iD_y)\phi|^2 \pm \frac{1}{2} \vec{\nabla} \wedge \vec{J} \pm \frac{1}{2m} B^{em} |\phi|^2 + \frac{\lambda}{2} (\delta\rho)^2 \right\} . \tag{4.19}$$

4.2.1. Case with $n<0$

We start discussing the case with the lower sign. Integrating the second term of (4.19) by parts we get:

$$H = \int d^2r \left\{ \frac{1}{4} g_B F_{ij} F_{ij} - \frac{2}{m} \phi^\dagger \bar{D} D \phi - \frac{1}{2} \vec{\nabla} \wedge \vec{J} - \frac{1}{2m} B^{em} |\phi|^2 + \frac{\lambda}{2} (\delta\rho)^2 \right\} , \tag{4.20}$$

where we have introduced the complex notation for the covariant derivatives:

$$D = \frac{1}{2} (D_x - iD_y) \qquad \bar{D} = \frac{1}{2} (D_x + iD_y) . \tag{4.21}$$

The equations of motion from this hamiltonian are:

$$\begin{aligned} \frac{\delta H}{\delta \phi^\dagger} = 0 \qquad &\Rightarrow \qquad \frac{2}{m} \bar{D} D \phi + \frac{1}{2m} B^{em} \phi - \lambda \delta\rho \phi = 0 \\ \frac{\delta H}{\delta A_i} = 0 \qquad &\Rightarrow \qquad \partial_j F_{ji} = -\frac{1}{g_B} J_i . \end{aligned} \tag{4.22}$$

Notice that the second of (4.22) is exactly the same as equation (2.5) with $g_E = \alpha = 0$.
Taking

$$\lambda = \frac{1}{4m\alpha} \qquad \alpha = m g_B \tag{4.23}$$

we find that equation (4.22) admits the solution:

$$\begin{aligned} D\phi &= 0 \\ B^{em} &= \frac{1}{2\alpha} \delta\rho . \end{aligned} \tag{4.24}$$

Indeed the second of (4.22) in polar coordinates reads:

$$\begin{cases} \partial_r B^{em} = -\dfrac{1}{g_B} J_\theta \\ \dfrac{1}{r}\partial_\theta B^{em} = \dfrac{1}{g_B} J_r \end{cases} \tag{4.25}$$

and computing J_θ and J_r for the vortex $\phi(r,\theta) = f(r)e^{in\theta}$ we get:

$$\begin{cases} J_\theta = \dfrac{1}{m} f(r) \left[\dfrac{n}{r} - A_\theta^{em}(r)\right] f(r) \\ J_r = 0 \ , \end{cases} \tag{4.26}$$

the first of (4.26), in its polar form (4.8), becomes:

$$J_\theta = -\frac{1}{m} f(r) \frac{d}{dr} f(r) \ . \tag{4.27}$$

On the other hand from the second of (4.24) we get:

$$\partial_r B^{em} = \frac{1}{2\alpha}\frac{d}{dr}\left[f^2(r) - \rho_0\right] = \frac{1}{\alpha} f(r) \frac{d}{dr} f(r) \tag{4.28}$$

proving the validity of the first of (4.25), if (4.23) holds. The second is obviously true. Formally (4.24) are exactly the equations for ϕ and B^{CS} found in the chiral theory described above (see equations (4.6) and the second of (4.5)).

Notice that, because of the presence of the kinetic term for the gauge field, in the Maxwell case λ has no more the value $\dfrac{1}{2m\alpha}$ it had in the chiral case. Furthermore, now the value of the constants α and g_B are no longer free but are related.

The hamiltonian (4.18) can be written as:

$$H = \int d^2r \left\{ \frac{1}{2} g_B (B^{em})^2 + \frac{1}{2m} |\vec{D}\phi|^2 + \frac{\lambda}{2} (\delta\rho)^2 \right\} \ . \tag{4.29}$$

Using the second of (4.24) and (3.28) with the lower sign, equation (4.29) can be rewritten as:

$$H = \int d^2r \left\{ \frac{2}{m} |D\phi|^2 - \frac{1}{2} \vec{\nabla} \wedge \left(\vec{J} + \frac{\rho_0}{m} \vec{A}^{em} \right) + \left(\frac{\lambda}{2} + \frac{g_B}{8\alpha^2} - \frac{1}{4\alpha} \right) (\delta\rho)^2 \right\} \ . \tag{4.30}$$

The second term can be computed again using the asymptotic behaviour of $\vec{A}$. The third term vanishes using the values of equation (4.23) we get:

$$H = -\frac{\pi\rho_0}{m} n + \frac{2}{m} \int d^2r \, |D\phi|^2 \tag{4.31}$$

Notice that, since for our solution the first of (4.24) holds, the positivity of H requires n to be negative.

Formally, equation (4.31) is equal to the corresponding hamiltonian of the chiral theory (3.36).

4.2.2. Case with $n>0$

Now let us discuss the case in which the identity (3.28) is used with the other (upper) sign. The hamiltonian (4.18) can be rewritten in the following way:

$$H = \int d^2r \left\{ \frac{1}{4} g_B F_{ij} F_{ij} - \frac{2}{m} \phi^\dagger D \bar{D} \phi + \frac{1}{2m} \vec{\nabla} \wedge \vec{J} + \frac{1}{2m} B |\phi|^2 + \frac{\lambda}{2} (\delta\rho)^2 \right\} . \tag{4.32}$$

We stress that, though in different clothes, this is the *same* hamiltonian as equation (4.20). Again we can compute the equations of motion:

$$\begin{aligned} \frac{\delta H}{\delta \phi^\dagger} = 0 \qquad &\Rightarrow \qquad \frac{2}{m} \bar{D} D \phi - \frac{1}{2m} B^{em} \phi - \lambda \delta\rho \phi = 0 \\ \frac{\delta H}{\delta A_i} = 0 \qquad &\Rightarrow \qquad \partial_j F_{ji} = -\frac{1}{g_B} J_i \ . \end{aligned} \tag{4.33}$$

These equations are solved by:

$$\begin{aligned} \bar{D}\phi &= 0 \\ B^{em} &= -\frac{1}{2\alpha} \delta\rho \ . \end{aligned} \tag{4.34}$$

with the values of λ and α as in (4.23).
As noted in the chiral case these are the equations that are obtained from (4.24) using the parity transformation (4.2).
Equations (4.34) are again formally equal to the corresponding equations for ϕ and B in the chiral theory (see equations (4.14) and (4.11)), so they have the same vortex solutions.
The hamiltonian (4.32) can be rewritten as

$$H = \frac{\pi \rho_0}{m} n + \frac{2}{m} \int d^2r \, |\bar{D}\phi|^2 \ . \tag{4.35}$$

Now the positivity of H requires $n>0$.
Again equation (4.35) is formally equal to the corresponding hamiltonian of the chiral theory (4.13).
Concluding we have shown that the vortex solutions of two chiral theories connected by a $\mathbf{P(T)}$ transformation can be obtained as different vortex solutions of a single Maxwell theory.

5. Meissner effect

In this chapter we study what happens to the our chiral fluid when it is coupled to an external magnetic field. More exactly we are interested in the possibility that there could be screening of the magnetic field, like happens in standard superconductors (Meissner effect).
First let us shortly review what happens in the standard superconducting fluids.
The standard superfluids, as it is well known (see for example the classic book by Nozières and Pines [36]), have an energy spectrum without gap. Their dispersion relation is linear in $|\vec{p}|$ for small $|\vec{p}|$. This is a signal that they possess a zero mode which is the phonon excitation, indeed this simply means that these fluids (differently from ours) are compressible and can therefore support compressional waves (the phonon excitations). When coupled to an external magnetic field this zero mode behaves like a Goldstone boson and, through the Higgs mechanism, provide a mass term for the electromagnetic field. A massive gauge field is of course exponentially decreasing and therefore there is Meissner effect.
Mean-field computations of fractional statistics systems lead to similar mechanisms [8] [9] [37] [38]. The authors found the linearly dispersing compressional modes necessary to the Higgs mechanism and take this fact as a sign of Meissner effect. This result gave a considerable consistence to the hope that anyon superconductivity could be a convincing model of high T_c layered superconductors.
In our case, because of the presence of the gap, there cannot be linearly dispersing excitations like the phonons that is, stated in other words, the fluid is *incompressible*. This is a consequence of the fact that the intrinsic dynamics of our field is described by means of the coupling with a gauge field which, as we have discussed in the previous chapters is responsible of the gap. It is exactly because of the presence of this gauge field that the Goldstone theorem is evaded.
Nevertheless in this chapter we will show that, at least in the case where the external magnetic field is orthogonal to the layers' plane, in our non-standard system the configuration in which there is screening is energetically favoured with respect to the one in which the magnetic field penetrates freely throughout the sample. Furthermore we find that the penetration depth is exactly the one characteristic of the type II superconductors.
To study this kind of problem*, which is essentially a three-dimensional effect, we consider a multilayered bulk of many two-dimensional films separated by a spacing d, in a similar way as we did in the chapter 2 studying the persistent currents round the piled annuli. We suppose that at the edge of the bulk there is a uniform, constant real magnetic field

* For a general review on the properties of the layered superconductors see for example reference [39].

pointing in two different directions with respect to the layers' plane, as in figure 3.
We will study, in both cases, which is the penetration depth that minimizes the energy of the system.

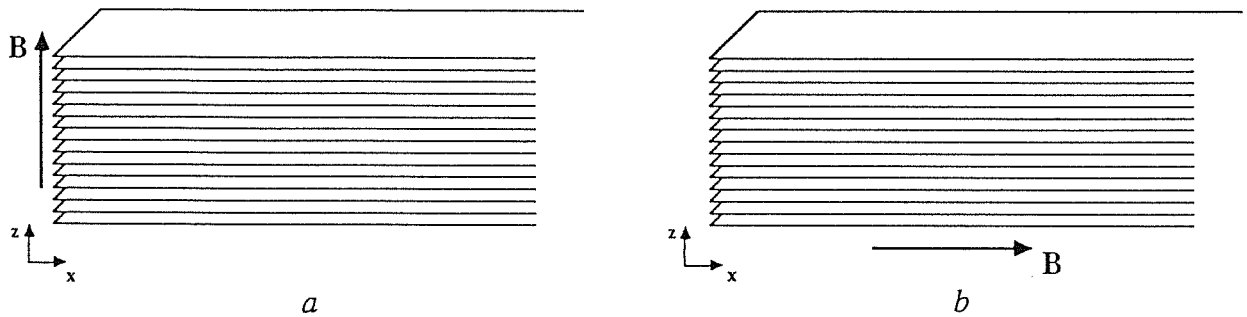

Figure 3

5.1. Screening of the magnetic field orthogonal to the layers

We start studying the case in figure 3a where the magnetic field is orthogonal to the layers' plane. We consider the chiral hamiltonian studied in the previous chapter with the electrostatic term:

$$H = \int d^3x \left\{ \frac{1}{2m}|\vec{D}\phi|^2 + \frac{d}{2}\left[\left(\vec{\nabla}\wedge\vec{A}^{em}\right)^2 + (\vec{E}^{em})^2\right] + \frac{\lambda}{2}(\delta\rho)^2 \right\} . \tag{5.1}$$

Here $\vec{A}^{em}$ is the gauge potential of the constant external magnetic field, and $\vec{E}^{em}$ is the electrostatic field discussed in the previous chapters.
We assume uniformity in the z direction. This fact in particular implies that the matter density is uniform in z that is it is the same in every layer. As a consequence we have no electric field orthogonal to the layers' plane. Therefore the two equations

$$\begin{cases} \vec{\nabla}\cdot\vec{E}^{em} = e\delta\rho^{(3)} = \dfrac{e}{d}\delta\rho \\ \vec{\nabla}\wedge\vec{A}^{CS} = \dfrac{1}{2\alpha}\delta\rho \end{cases} \tag{5.2}$$

tell us that $\vec{E}^{em}$ and $\vec{A}^{CS}$ are dual two-dimensional vectors, that is

$$E_i^{em} = \frac{2e\alpha}{d}\epsilon_{ij}A_j^{CS} \ . \tag{5.3}$$

Therefore the hamiltonian is written as

$$\frac{H}{L_z} = \int dxdy \left\{ \frac{1}{2m}|\vec{D}\phi|^2 + \frac{d}{2}\left(\vec{\nabla}\wedge\vec{A}^{em}\right)^2 + \frac{2e^2\alpha^2}{d}(\vec{A}^{CS})^2 + \frac{\lambda}{2}(\delta\rho)^2 \right\} \ , \tag{5.4}$$

where we have performed integration over the z coordinate and L_z is the length of the sample in the direction orthogonal to the layers.
The external magnetic field is supposed to be constant. In particular it does not depend on the y coordinate, which is the direction parallel to the edge of the bulk. Therefore, in the gauge $\vec{\nabla}\cdot\vec{A}^{em}=0$ we can take $\vec{A}^{em}$ pointing in the y direction:

$$\vec{A}^{em} = (0, A^{em}(x), 0) \tag{5.5}$$

furthermore, since $\delta\rho=\delta\rho(x)$, we have the freedom to take, always in the gauge $\vec{\nabla}\cdot\vec{A}^{em}=0$, also $\vec{A}^{CS}$ in the y direction:

$$\vec{A}^{CS} = (0, A^{CS}(x), 0) \ . \tag{5.6}$$

With these assumptions all quantities in (5.4) depend only on x, so we can perform the integration in y and get:

$$\begin{aligned}\frac{H}{L_yL_z} = \int_0^\infty dx \Bigg\{ &\frac{1}{2m}\left[|\partial_x\phi|^2 + |eA^{em} + A^{CS}|^2\rho\right] + \frac{d}{2}(\partial_x A^{em})^2 + \\ &+ \frac{2e^2\alpha^2}{d}(A^{CS})^2 + \frac{\lambda}{2}(\delta\rho)^2 \Bigg\}\end{aligned} \tag{5.7}$$

L_y being the length of the edge of the bulk.

5.1.1. A variational argument

Now, before going into computational details, we want to spend some time analyzing qualitatively the reason why we expect a screening. To this end we use a variational principle and we will make some further simplificatory assumptions. The first is to suppose that some external device is keeping constant the magnetic flux $\Phi_0 = L_y l_x B^{em}$, where l_x is the penetration depth of the magnetic field, so that

$$B^{em}l_x = \frac{\Phi_0}{L_y} = \varphi_0 \tag{5.8}$$

is given to the system from outside.
The second assumption we make is to suppose B constant for $0<x<l_x$ and zero for $x>l_x$ whereas actually it is exponentially decreasing.
The third assumption we make is to take a constant value for the density $\rho=\rho_0$.
So we have for $0<x<l_x$:

$$B^{em} = \frac{\varphi_0}{l_x} \qquad A^{em}(x) = \frac{x}{l_x}\varphi_0 \ . \tag{5.9}$$

For $x>l_x$, A^{em} is constant and it is possible to cancel it in the covariant y-derivative with the phase of ϕ. Thus, the integration runs from 0 to l_x.
To test the meaningfulness of what we are doing let us see what happens for the well known case of the standard superconductor, that is with $\vec{A}^{CS}=0$; the hamiltonian (5.7) becomes:

$$\frac{H}{L_y L_z} = \int_0^{l_x} dx \left[\frac{d}{2}(B^{em})^2 + \frac{\rho_0}{2m}e^2(A^{em})^2\right] = \frac{d}{2}\frac{\varphi_0^2}{l_x} + \frac{\rho_0}{6m}e^2\varphi_0^2 l_x \ . \tag{5.10}$$

Minimizing H with respect to l_x we find $l_x = \sqrt{\frac{3md}{e^2\rho_0}}$ which is indeed of the same order as the standard value of the penetration depth for type II superconductors:

$$l_0 = \sqrt{\frac{m}{e^2\rho^{(3)}}} \ . \tag{5.11}$$

Notice that in what we have done a fundamental role is played by the term quadratic in A^{em}, the "mass term" for the electromagnetic field.
In our case, with $\vec{A}^{CS}\neq 0$, this screening effect could be ruined by the possible cancellation $\vec{A}^{CS}=-e\vec{A}^{em}$ but, notice, we have also the electrostatic interaction term quadratic in $\vec{A}^{CS}$ which now plays the role of the "mass term". In fact we will see in chapter 6 that this is not exactly the case. There we will show in details that, in the case of the geometry of figure 3a, the configuration with $\vec{A}^{CS}=-e\vec{A}^{em}$ is energetically not favoured also in absence of the electrostatic term. Indeed we have in this case:

$$\begin{aligned}\frac{H}{L_y L_z} &= \int_0^{l_x} dx \left\{\frac{d}{2}(B^{em})^2 + \frac{2e^2\alpha^2}{d}\left(\vec{A}^{CS}\right)^2 + \frac{\rho_0}{2m}\left(eA^{em}+A^{CS}\right)^2\right\} = \\ &= \frac{d}{2}\frac{\varphi_0^2}{l_x} + \frac{2e^4\alpha^2}{3d}\varphi_0^2 l_x \ .\end{aligned} \tag{5.12}$$

Minimizing with respect to l_x we get $l_x = \frac{\sqrt{3}d}{2e^2\alpha}$. We see that we get anyhow a *finite* penetration depth, so we expect to have screening.

5.1.2. A detailed analysis

Now we turn back to hamiltonian (5.7) and analyze it more quantitatively in the framework of the small deformation approach introduced in section 3.2.
We recall here the basic definitions:

$$\phi = \sqrt{\rho} \qquad \partial_x \phi(x) = \frac{1}{2\sqrt{\rho_0}} \partial_x^2 u(x) \qquad \delta\rho = \partial_x u(x) \qquad A^{CS} = \frac{1}{2\alpha} u \ . \tag{5.13}$$

Notice that in this one-dimensional case ϕ is real, so there is no phase.
The hamiltonian becomes:

$$\begin{aligned} \frac{H}{L_y L_z} = \int_0^\infty dx \left\{ \frac{1}{2m} \left[\frac{1}{4\rho_0} \left(\partial_x^2 u\right)^2 + \left(e A^{em} + \frac{1}{2\alpha} u \right)^2 \rho_0 \right] + \right. \\ \left. + \frac{d}{2} (\partial_x A^{em})^2 + \frac{e^2}{2d} u^2 + \frac{\lambda}{2} (\partial_x u)^2 \right\} \ . \end{aligned} \tag{5.14}$$

Varying this hamiltonian with respect to $u(x)$ and $A^{em}(x)$ we find the equations:

$$\begin{aligned} \frac{\delta}{\delta u} \left(\frac{H}{L_y L_z} \right) &= \frac{1}{4m\rho_0} \triangle^2 u + \frac{\rho_0}{2\alpha m} \left(e A^{em} + \frac{1}{2\alpha} u \right) + \frac{e^2}{d} u - \lambda \triangle u = 0 \\ \frac{\delta}{\delta A^{em}} \left(\frac{H}{L_y L_z} \right) &= \frac{e\rho_0}{m} \left(e A^{em} + \frac{1}{2\alpha} u \right) - d \triangle A^{em} = 0 \ . \end{aligned} \tag{5.15}$$

If we write u and A^{em} in the following form:

$$u(x) = u_0 e^{-\chi x} \qquad A^{em}(x) = A_0 e^{-\chi x} \tag{5.16}$$

where u_0 and A_0 are the values at the edge of the bulk, it is possible to rewrite the equations above in the matricial form:

$$\begin{pmatrix} \frac{\chi^4}{4m\rho_0} - \lambda\chi^2 + \frac{\rho_0}{4\alpha^2 m} + \frac{e^2}{d} & \frac{e\rho_0}{2\alpha m} \\ \frac{e\rho_0}{2\alpha m} & -d\chi^2 + \frac{e^2\rho_0}{m} \end{pmatrix} \begin{pmatrix} u \\ A^{em} \end{pmatrix} = 0 \ . \tag{5.17}$$

Putting to zero the determinant of this matrix we get the following algebraic equation of the third order in χ^2:

$$\frac{d}{4m\rho_0} \chi^6 - \left(\frac{e^2}{4m^2} + \lambda d \right) \chi^4 + \left(e^2 + \frac{e^2 \rho_0 \lambda}{m} + \frac{\rho_0 d}{4\alpha^2 m} \right) \chi^2 - \frac{e^4 \rho_0}{md} = 0 \ . \tag{5.18}$$

Solving this equation for χ we will find the decay length of $u(x)$ and of $A^{em}(x)$, which are known respectively as the *coherence length* which is the characteristic scale of the spatial

variations of the order parameter ϕ and the *penetration depth* of the magnetic field inside the sample. The ratio of these two lengths is a dimensionless constant which is typical of a given superconductor. For superconductors of type I this ratio is much lesser than one, that is the coherence length is much bigger than the penetration depth. For superconductors of type II the situation is reversed.
If we take the following typical values for the parameters (as an order of magnitude we take e to be the electron charge and m the electron mass)

$$d = 1\text{Å} \qquad e^2 = \frac{4\pi}{137} \qquad \rho_0 = 4 \cdot 10^{-3}\text{Å}^{-2} \qquad m = 250\text{Å}^{-1} \qquad \lambda = \frac{\pi}{m} \qquad \alpha = \frac{1}{2\pi}\,, \tag{5.19}$$

we get the solutions:

$$\chi_1 = 1.21 \cdot 10^{-3} \qquad \chi_{2,3} = 0.56 \pm i0.54 \equiv \alpha \pm i\beta\ . \tag{5.20}$$

We can approximately compute analytically the smallest eigenvalue χ_1 by rewriting equation (5.18) in an approximate form taking only the leading terms:

$$\chi^2 \left(\frac{d}{4m}\chi^4 - \lambda d \chi^2 + e^2 \right) = \frac{e^4 \rho_0}{md}\ . \tag{5.21}$$

For small χ^2 we get the solution:

$$\chi^2 = \frac{e^4 \rho_0}{md} \frac{1}{e^2} = \frac{e^2 \rho_0}{md} \tag{5.22}$$

which, compare with equation (5.11), is exactly the expression for the inverse of the square of the standard penetration depth and corresponds numerically to χ_1 in equation (5.20). Let us note that by solving (5.18) in the limit of very small e^2 we would find:

$$\chi = \frac{2\sqrt{\pi} e^2}{d} \left[1 + O(e^2) \right] \tag{5.23}$$

which, apart from inessential numerical factors, is equal to the inverse of the l_x found minimizing (5.12). Indeed the qualitative analysis leading to (5.12) was meant in the limit of a very small electrostatic interaction. Actually this is not the case.
The general solution for $u(x)$ is the linear combination:

$$u(x) = u_1 e^{-\chi_1 x} + u_2 e^{-\chi_2 x} + u_3 e^{-\chi_3 x}\ . \tag{5.24}$$

Imposing the reality condition $u^*(x) = u(x)$ and $u(0) = 0$ we obtain:

$$u_1^* = u_1 \qquad u_2^* = u_3 \qquad u_1 = -2\mathrm{Re}\, u_2\ . \tag{5.25}$$

We can parameterize u_2 in the following way:

$$u_2 = \frac{1}{2}(-u_1 + iw) \ . \tag{5.26}$$

So $u(x)$ can be written in the form:

$$u(x) = u_1 e^{-\chi_1 x} - e^{-\alpha x}(u_1 \cos\beta x - w \sin\beta x) \tag{5.27}$$

giving for $\delta\rho$:

$$\delta\rho(x) = \partial_x u(x) = -\chi_1 u_1 e^{-\chi_1 x} + e^{-\alpha x}\left[(\alpha u_1 + \beta w)\cos\beta x + (\beta u_1 - \alpha w)\sin\beta x\right] \ . \tag{5.28}$$

Requiring ρ to vanish at the edge, that is $\delta\rho(0) = -\rho_0$ we can determine the value of w:

$$w = -\frac{\rho_0}{\beta} - \frac{\alpha - \chi_1}{\beta} u_1 \ . \tag{5.29}$$

Between $A^{em}(x)$ and $u(x)$ the following relation holds:

$$A^{em}(x) = \frac{e^2\rho_0}{2\alpha m d} \frac{1}{\chi^2 - \dfrac{e^2\rho_0}{md}} u(x) \ . \tag{5.30}$$

We then compute $B^{em} = \partial_x A^{em}$.
Imposing $B^{em}(0) = B_0^{em}$ we get a value for u_1, the only parameter still undetermined. If we substitute the values of the parameters we see that the exponential behaviour of B^{em} is controlled by the first eigenvalue, that is the penetration depth is $\dfrac{1}{\chi_1} = 826.45$Å. We can compare this value to the numerical value of the standard penetration depth (5.11) which is 825.57Å.
It is seen numerically that the behaviour of $\delta\rho$ is controlled by the other eigenvalues, that is the coherence length is $\dfrac{1}{\alpha} = 1.78$Å.
Notice that the penetration depth is about 400 times the coherence length, so our system behaves like a type II superconductor.

5.1.3. Magnetic vortices

In this subsection we study, with a variational method, the vortices in presence of an external electromagnetic field orthogonal to the layers' plane.
These vortices have an origin different from the vortices studied in section 3.3. Those were originated by fluctuations of the CS magnetic field, that is of the matter density from the mean value. The present ones are instead the standard well known vortex configurations

like in a superconductor of type II between the two critical temperatures. They consist of small regions of the specimen where the external magnetic field penetrates. There are currents flowing around the vortices. Furthermore there is a penetration of the magnetic field from the vortex region to the surrounding region.
As we saw in the previous section the hamiltonian is:

$$\frac{H}{L_z} = \int d^2r \left\{ \frac{1}{2m}|\vec{D}\phi|^2 + \frac{d}{2}(B^{em})^2 + \frac{2e^2\alpha^2}{d}(\vec{A}^{CS})^2 + \frac{\lambda}{2}(\delta\rho)^2 \right\} . \tag{5.31}$$

We make the following ansatz:

$$\begin{aligned} &\phi = f(r)e^{in\theta} \\ &erA_\theta^{em} = n\left(1 - e^{-\mu r^2}\right) && A_r^{em} = 0 \\ &rA_\theta^{CS} = \frac{1}{2\alpha}\int_0^r dr'r'\left[f^2(r') - \rho_0\right] = -\frac{1}{4\alpha}\rho_0 r^2 e^{-\omega r^2} && A_r^{CS} = 0 . \end{aligned} \tag{5.32}$$

From here we easily get:

$$f^2(r) = \rho_0 - \rho_0(1 - \omega r^2)e^{-\omega r^2} . \tag{5.33}$$

Notice that our ansatz is such that we have quantization of the flux of the external magnetic field, differently from the vortices studied previously when it was the flux of the CS magnetic field to be quantized. Notice also that since the vorticity is no longer connected with the CS field, and therefore with the fluctuation of the matter density now, differently from the vortices studied before, it is possible to have an isolated vortex or antivortex since the conservation of the total number of particles is anyway satisfied, $\int_0^\infty drr\left[f^2(r) - \rho_0\right] = 0$, as can be checked from the last of equations (5.32).
If one substitutes in (5.31) and minimizes numerically with respect to μ and ω, with the usual values of the parameters (5.19) one gets:

$$\omega = 0.101\text{Å}^{-2} \qquad \mu = 7.336 \cdot 10^{-7}\text{Å}^{-2} \tag{5.34}$$

for the case of the antivortex ($n=-1$) and

$$\omega = 0.117\text{Å}^{-2} \qquad \mu = 7.337 \cdot 10^{-7}\text{Å}^{-2} \tag{5.35}$$

for the case of the vortex ($n=1$).
From these results we get the values of the dimensions of the vortex and of the penetration of the magnetic field:

$$\frac{1}{\sqrt{\omega}} = 3.147\text{Å} \qquad \frac{1}{\sqrt{\mu}} = 1167.54\text{Å} \tag{5.36}$$

for the antivortex, and

$$\frac{1}{\sqrt{\omega}} = 2.924\text{Å} \qquad \frac{1}{\sqrt{\mu}} = 1167.46\text{Å} \tag{5.37}$$

for the vortex. Notice that for the vortex and for the antivortex we have different results, although very close to each other, as it should have been expected since our system is chiral. Notice that the value obtained by equation

$$\frac{1}{\sqrt{\mu}} = \sqrt{\frac{2md}{e^2\rho_0}}\ , \tag{5.38}$$

with the usual values of the parameters (5.19), is 1167.54Å. Therefore we can say that we find again essentially the value found in the previous section for the edge penetration. We see that again the behaviour is that typical for a type II superconductor.

5.1.4. Layered structure of the vortices

We can also study the properties of these vortices due to the fact that the sample is composed of a stack of many not-strongly-coupled layers. We follow reference [40] where a three dimensional vortex is built up superposing a stack of two dimensional vortices in the case of a standard high T_c superconductor. In that paper it is explicitly computed, as a first step, the magnetic field, $\vec{b}$, produced by a single layer and then, using this result, the whole stack contribution is computed. Here we will only show that in our case we can reach, under reasonable assumptions, the same first step, and then just state the final results.

The problem has a cylindrical symmetry therefore we will use cylindrical polar coordinates (r, θ, z). The current flowing in a single layer is:

$$\vec{J} = (0, J_\theta, 0) \qquad J_\theta = J_\theta(r,z) = K_\theta(r)\delta(z)\ . \tag{5.39}$$

From Ampère's law we get:

$$\vec{\nabla} \wedge \vec{b} = \vec{J} \Rightarrow \begin{cases} \partial_z b_r - \partial_r b_z = K_\theta(r)\delta(z) \\ \partial_z b_\theta = 0 \\ \frac{1}{r}\partial_r(r b_\theta) = 0\ . \end{cases} \tag{5.40}$$

From the last two we get $b_\theta = 0$.

For $z \neq 0$ the current density is zero and therefore Ampère's law reduce to equation $\vec{\nabla} \wedge \vec{b} = 0$ which is solved by:

$$A_\theta(r,z) = \int_0^\infty dq A_0(q) J_1(rq) e^{-q|z|} \qquad A_r = A_z = 0\ . \tag{5.41}$$

notice that $\vec{\nabla} \cdot \vec{A} = 0$. Here $J_1(z)$ is the Bessel function of the first kind and $A_0(q)$ is an unknown function to be determined.
From the first of (5.40), solved for $z=0$, and (5.41) we can get:

$$K_\theta(r) = b_r(r,0^+) - b_r(r,0^-) = 2\int_0^\infty dqqA_0(q)J_1(rq) \ . \tag{5.42}$$

For our vortex we know:

$$K_\theta = \frac{e}{m}\left(\frac{n}{r} - eA_\theta^{em} - A_\theta^{CS}\right) f^2(r) \tag{5.43}$$

therefore, using (5.41):

$$\int_0^\infty dqA_0(q)J_1(rq)\left[2q + \frac{e^2}{m}f^2(r)\right] = \frac{e}{m}f^2(r)\left(\frac{n}{r} - A_\theta^{CS}\right) \ . \tag{5.44}$$

If the dimensions of the vortex are much smaller than the penetration depth of $\vec{b}$, then it is sensible to take $f^2(r)$ equal to its mean value ρ_0 and $A_\theta^{CS}=0$. Within this approximation (5.44) becomes:

$$\int_0^\infty dqA_0(q)J_1(rq)\left(2q + \frac{e^2\rho_0}{m}\right) = \frac{e\rho_0}{m}\left(\frac{n}{r}\right) \ . \tag{5.45}$$

Using the orthogonality property of the Bessel functions

$$\int_0^\infty drrJ_1(rq)J_1(rq') = \frac{1}{q}\delta(q-q') \tag{5.46}$$

we get:

$$A_0(q) = \frac{en\rho_0}{m}\left(2q + \frac{e^2\rho_0}{m}\right)^{-1} = \frac{n/e}{1+\Lambda q} \qquad \Lambda = \frac{2m}{e^2\rho_0} \ . \tag{5.47}$$

Λ is related to the nominal penetration depth of equation (5.11) by the relation:

$$\Lambda = \frac{2l_0^2}{d} \tag{5.48}$$

and can be considered as the two dimensional penetration depth.
One can then compute (5.41) and verify that the magnetic field decays with the penetration depth Λ. The other layers have no vortices, but have an important effect in screening the magnetic field generated by the currents in the layer where the vortex is present.
These results are exactly the same obtained in [40]. We will not reproduce here all the computations that can be found in [40], but just state the main results.
Having studied what happens with a single layer we possess the building block to all the multilayered system superposing the entire stack of two dimensional vortices.
Then one can study the binding energy between vortices in different layers and find that thermal excitation breaks up the stack above a transition temperature corresponding to the Kosterlitz-Thouless temperature for a bidimensional system, see references [41] [42].

5.2. Magnetic field parallel to the layers

In this section we consider the case in which the magnetic field lies in the plane of the layers, as in figure 3b. We consider two different effects. The penetration of the magnetic field in the direction orthogonal to the layers and the penetration in the interlayer spacing. The first effect is quite peculiar of our fluid. We find that with this orientation the magnetic field is not screened anymore, but rather its penetration depth grows with the power 1/3 of the sample size, apart from logarithmic corrections.
The other effect is typical of multilayered superconductors and is essentially based on the Josephson coupling between the layers.

5.2.1. Meissner effect

In this section we consider the case in which B^{em} is parallel to the plane of the layers. This problem, for the case of standard high T_c superconductors, has been studied in many papers by J.R. Clem and collaborators [43] [44] [45] [46] [40]. In our analysis we choose B^{em} pointing in the x-direction (see figure 3b) and study the penetration depth in z, l_z, supposing uniformity along y. Let us start from the following hamiltonian:

$$\begin{aligned}\frac{H}{L_y} &= \int dxdz \left\{ \frac{1}{2m} \left| \left(\vec{\nabla} - ie\vec{A}^{em} - i\vec{A}^{CS} \right) \phi \right|^2 + \frac{d}{2} \left(B^{em} \right)^2 + \frac{\lambda}{2} (\delta\rho)^2 \right\} - \\ &- \frac{de^2}{2} \int dxdx'dzdz' \left\{ \frac{\delta\rho(x',z')}{d} \log \left[\frac{(x-x')^2 + (z-z')^2}{\Lambda^2} \right] \frac{\delta\rho(x,z)}{d} \right\} .\end{aligned} \tag{5.49}$$

Here we have introduced the electrostatic interaction between the fluctuations of the charged matter which, due to uniformity in the y-direction, is in fact the electrostatic interaction of a two-dimensional distribution of charge, which is known to be logarithmic; Λ is a convenient dimensional constant which, since $\int \delta\rho = 0$, can take an arbitrary value. If we choose $\vec{A}^{em}$ and $\vec{A}^{CS}$ pointing both in the y-direction, that is $\vec{A}^{em} = (0, A^{em}(x,z), 0)$, $\vec{A}^{CS} = (0, A^{CS}(x,z), 0)$, we can rewrite the hamiltonian as:

$$\begin{aligned}\frac{H}{L_y} &= \int dxdz \left\{ \frac{1}{2m} |\partial_x \phi|^2 + \frac{d^2 j_0}{e^2 \rho_0} |\partial_z \phi|^2 + \right. \\ &\left. + \frac{1}{2m} \left| eA^{em} + A^{CS} \right|^2 \rho + \frac{d}{2} \left(\partial_z A_y^{em} \right)^2 + \frac{\lambda}{2} (\delta\rho)^2 \right\} - \\ &- \frac{e^2}{2d} \int dxdx'dzdz' \left\{ \delta\rho(x',z') \log \left[\frac{(x-x')^2 + (z-z')^2}{\Lambda^2} \right] \delta\rho(x,z) \right\} .\end{aligned} \tag{5.50}$$

Here j_0 is a constant, with the dimension of a current density, depending on the intrinsic features of the material which measures the Josephson coupling between neighbouring layers.

Similarly to what we have done for the field orthogonal to the layers, we consider the configuration which is less favourable for the screening, that is the possible cancellation $A^{CS}(x,z) = -A^{em}(z)[\Theta(x)\Theta(L_x - x)]$, L_x being the length of the x-edge of our sample, and Θ is the step function. Thus:

$$\delta\rho(x,z) = 2\alpha\partial_x A^{CS}(x,z) = -2e\alpha A^{em}(z)\left[\delta(x) - \delta(L_x - x)\right] \ . \tag{5.51}$$

This makes equal to zero the second term in the first integral of (5.50). The first and the last term in the first integral of (5.50) are edge effects giving a contribution which is very small compared with the rest since, going through the computation, one can see that they are suppressed respectively by factors $(L_x)^{-1}$ and $(L_x)^{-1/3}$. So in the following we will skip them. Thus:

$$\frac{H}{L_y} = \frac{dL_x}{2}\int dz\,(\partial_z A_y^{em})^2 + \frac{4e^4\alpha^2}{d}\int dzdz'\left\{A^{em}(z)\log\left[1 + \frac{L_x^2}{(z-z')^2}\right]A^{em}(z')\right\} \ . \tag{5.52}$$

Like we have done in subsection 5.1.1 (compare with equation (5.8)), we fix the total flux $\Phi_0 = BL_y l_z$ and define $\varphi_0 = \dfrac{\Phi_0}{L_y}$ such that for $0 < z < l_z$:

$$B = \frac{\varphi_0}{l_z} \qquad\qquad A^{em} = -\frac{\varphi_0}{l_z}z \tag{5.53}$$

and the integration is from 0 to l_z.
Therefore we get:

$$\begin{aligned}\frac{H}{\varphi_0^2 L_y} &= \frac{L_x d}{2l_z} + \frac{4e^4\alpha^2}{d}\frac{1}{l_z^2}\int_0^{l_z} dzdz'\left\{zz'\log\left[1 + \frac{L_x^2}{(z-z')^2}\right]\right\} = \\ &= \frac{L_x d}{2l_z} + \frac{e^4\alpha^2}{d}l_z^2\left[\log\frac{L_x^2}{l_z^2} + \cdots\right] \ .\end{aligned} \tag{5.54}$$

We assumed L_x/l_z large to expand the logarithm.
Minimizing H with respect to l_z we get:

$$l_z \simeq \left(\frac{3}{16e^4\alpha^2}\right)^{1/3}\cdot d\cdot\left(\frac{L_x}{d}\right)^{1/3}\left[\log\left(\frac{L_x}{d}\right) + \cdots\right]^{-1/3} \ . \tag{5.55}$$

Therefore we have a "quasi Meissner effect" in the sense that even if $l_z \to \infty$ for $L_x \to \infty$ we have $\dfrac{l_z}{L_x} \to 0$. The result of equation (5.55) appears to be quite peculiar of the chiral quantum charged fluid studied in this paper.
This result is, at least qualitatively, in accord with the experiments made with cuprate superconductors in which the penetration depth in the direction orthogonal to the layers has been measured to be much greater than the parallel one*.

* See for example [47], where, with a sample of $Tl_2Ba_2CaCu_2O_x$, the anisotropy of the penetration depth has been found to be of the order of 10^2.

5.2.2. Penetration in the interlayer spacing

In this subsection for completeness of treatment we review a general argument for multilayered superconductors indicating that the magnetic field parallel to the layers can penetrate easily in the interlayer spacing, therefore in the direction parallel to the layers (say in the y-direction, for a field along x), even in the case in which l_z is finite. How much the corresponding l_y is large, depends on how small is the interlayer Josephson coupling. This effect would be basically the same for our chiral quantum fluid. In order to study this penetration in the direction parallel to the layers we follow the study of reference [43]considering a possible vortex configuration inside the material. From this configuration we will infer the penetration properties. A crucial fact for this study is taking into account the Josephson coupling between neighbouring layers, see [43] [48]. This study has already been worked out in reference [43] for the case of a standard high T_c superconductor, here we merely rephrase that paper for our case. The main fact is that one has to add to the current density:

$$\vec{J} = \frac{e\rho_0}{m}\left(\vec{\nabla}\gamma - e\vec{A}\right) \tag{5.56}$$

(here γ is the phase of ϕ), the Josephson current flowing between to neighbouring layers, say the n-th and the $(n+1)$-th, proportional to the sine of the gauge invariant difference of phase of ϕ between the layers:

$$j_z = j_0 \sin(\Delta\gamma_n) \qquad \Delta\gamma_n = \gamma_{n+1} - \gamma_n + e\int_n^{n+1} d\vec{l}\cdot\vec{A} \tag{5.57}$$

j_0 is a constant depending on the material.
Solving the Ampère equation one finds [43]:

$$b(\tilde{r}) = \frac{1}{el_z\lambda_J}K_0(\tilde{r}) \qquad \tilde{r} = \sqrt{\frac{y^2}{\lambda_J^2} + \frac{z^2}{l_z^2}} \tag{5.58}$$

with $\lambda_J^2 = \dfrac{1}{edj_0}$; here d is the stack periodicity of the layers.
This result tells essentially that $\vec{B}$ penetrates differently along y, that is parallel to the layers, and along z, that is orthogonally, in other words the vortex has an "elliptic symmetry".
In conclusion, in both cases of ordinary superconductors and the chiral quantum fluid the magnetic field would easily penetrate along the interlayer spacing. Instead, the penetration across the layers of a magnetic field parallel to them will be finite for an ordinary superconductor (for not too small Josephson coupling), whereas it will grow with a fractional power of the sample's dimension for the chiral quantum fluid.

6. Meissner effect without electrostatic term

In this chapter we consider a somewhat different system. We imagine that the layer where the fluid lies provides a uniform background that neutralizes the charge, so that the fluid is globally neutral. Until know we have assumed the background charges to be fixed and therefore that there appear electrostatic effects where $\delta\rho \neq 0$. In this section we will assume that the background charge can move and in some way compensate the local excess of electrostatic charge. In this way, of course, the system remains locally neutral.
In subsection 5.1.1 we showed how the electrostatic term, that we are going to drop in this section, prevents the possible cancellation of the mass term in the hamiltonian (see equation (5.12) and the preceding discussion). We show here that nevertheless the configuration in which the magnetic field is screened is still energetically favoured.
We consider therefore as a starting point the hamiltonian (5.1) without the electrostatic term, that is:

$$H = \int d^3x \left\{ \frac{1}{2m} \left| \left(\vec{\nabla} - ie\vec{A}^{em} - i\vec{A}^{CS} \right) \phi \right|^2 + \frac{d}{2}(\vec{\nabla} \wedge \vec{A}^{em})^2 + \frac{\lambda}{2}(\delta\rho)^2 \right\} . \tag{6.1}$$

6.1. Qualitative description

Before going into computational details, we discuss in this section the essential points of the magnetic field penetration problem. We consider exactly the configurations of the previous chapter, with particular reference to figure 3. As we did in the previous chapter we suppose independence on the y coordinate so that $A^{CS} = A_y^{CS}(x)$ and $A^{em} = A_y^{em}(x)$ are the only non-vanishing components of the gauge fields. The phase of ϕ can be taken to be a constant, conventionally zero, otherwise it would contribute an additional positive energy (of course it will play a role in the vortex configuration).
Let us compute the field equation from the hamiltonian above performing the variation with respect to A^{em} and A^{CS}, we get:

$$\begin{aligned} -\partial_x^2 A^{em} + \frac{e\rho_0}{md}(A^{CS} + eA^{em}) &= 0 \\ -\partial_x^2 A^{CS} + \frac{\rho_0}{4\alpha^2\lambda}(A^{CS} + eA^{em}) &= 0 \ . \end{aligned} \tag{6.2}$$

One sees immediately that there is in principle a zero mode, corresponding to the configuration

$$\vec{A}^{CS} = -e\vec{A}^{em} \ . \tag{6.3}$$

Thus if (6.3) could be competitive with the standard configuration, it would spoil the screening of the external magnetic field. However to understand its relevance, one has to take properly into account the boundary conditions and to see how the allowed modes of A^{CS} can actually implement (6.3). In the following sections, we will perform both a qualitative analysis and a more quantitative one of configuration (6.3) in the two geometries of figure 3a-b. Of course after discussing whether or not the configuration of equation (6.3) is energetically favourite throughout the whole sample, we still have to find the optimum configuration and describe its space dependence. We will discuss it in detail in subsection 6.2.2 using variational methods.

6.1.1. Magnetic field orthogonal to the layers' plane

We start discussing the case with B^{em} orthogonal to the layers' plane (here we refer again to figure 3a). We suppose that the external magnetic field points in the direction of positive z-axis, and penetrates in the bulk in the x direction. We further assume as we did in the previous sections that the matter distribution is uniform in the y and in the z directions and we can choose the electromagnetic and Chern-Simons gauge field depending only on x and pointing in the y direction as in equations (5.5) and (5.6). With these choices the hamiltonian (6.1) becomes:

$$\frac{H}{L_y L_z} = \int dx \left\{ \frac{1}{2m} \left(|\partial_x \phi|^2 + \left| eA^{em} + A^{CS} \right|^2 \rho \right) + \frac{d}{2} (B^{em})^2 + \frac{\lambda}{2} (\delta\rho)^2 \right\} , \tag{6.4}$$

In this way we have

$$A^{em} = xB^{em} \qquad \delta\rho = 2\alpha\partial_x A^{CS} . \tag{6.5}$$

From (6.5), using (6.3), we get

$$\delta\rho = -2e\alpha B^{em} \tag{6.6}$$

on every point inside each layer.

Of course, the system is overall electrically neutral, therefore the support over which the quantum fluid lies in each layer acts as the neutralizing background. Here we are interested in the case when the background charge structure is not so rigid, and we allow the system to neutralize, in some way, the fluctuation $\delta\rho$.

In order to take into account the energy spent by the system for neutralizing the charge fluctuations, without changing the form of the effective hamiltonian, we consider the constant λ to be larger. This seems reasonable since the greater is the fluctuation $\delta\rho$ the greater is the energy necessary to neutralize it and the greater is the relevance of the term proportional to λ. Therefore in the future considerations we will be particularly interested in the limit of λ large.

We begin by observing that from equation (6.6) we see that the cancellation (6.3) cannot hold everywhere on the two dimensional space. In fact if this were the case we would have

$$\int dx\, \delta\rho = 2\alpha \int dx\, \vec{\nabla} \wedge \vec{A}^{CS} = -2e\alpha \int dx\, B^{em} = -2e\alpha L_x B^{em} \tag{6.7}$$

which, being different from zero, violates the conservation of the number of particles. Thus, there must be somewhere an additional missing density $\delta\rho^{(M)}$. Actually it is easy to convince oneself that this missing density must be concentrated on the edge of the sample. Indeed let us suppose that it is placed at $x = x_0$, then we can write the total density fluctuation as:

$$\delta\rho + \delta\rho^{(M)} = 2e\alpha B^{em} + 2e\alpha B^{em} L_x \delta(x - x_0)\ . \tag{6.8}$$

Note that in this way the total number of particles is conserved: $\int_0^{L_x} dx(\delta\rho + \delta\rho^{(M)}) = 0$. From this expression we get:

$$A^{CS} = \frac{1}{2\alpha} \int_0^x dx'\, \delta\rho(x') = -exB^{em} + eB^{em} L_x \Theta(x - x_0)\ . \tag{6.9}$$

Therefore, since $A^{em} = xB^{em}$, we get:

$$A^{CS} + eA^{em} = eB^{em} L_x \Theta(x - x_0) \tag{6.10}$$

that is, the compensation (6.3) holds for $x < x_0$. If we want it to hold all over the plane we have to choose $x_0 = L_x$, so the missing matter must be concentrated at the edge of the sample.

Notice that $\delta\rho^{(M)}$ is very large since it is proportional to L_x which is macroscopic. Therefore a very large energy comes, for instance, from the term in the hamiltonian which is proportional to $\int(\delta\rho^{(M)})^2$. Thus, we foresee that the configuration of equation (6.3) will be severely energetically not favoured, and that the quantum fluid will essentially behave as a standard superconductor. (One can also imagine that $\delta\rho^{(M)}$, so to speak, disappears because the fluid undergoes locally a kind of phase transition. But if the fluid is stable this too would cost energy, and the conclusion would be the same).

6.1.2. Magnetic field parallel to the layers' plane

We now turn to the case in which the external magnetic field is parallel to the layers, that is points in the x direction and penetrates the bulk in the z direction (see figure 3b). Here, as usual, we suppose uniformity of the matter distribution along y. Therefore we

can choose the gauge fields pointing in the y direction. With these assumptions the gauge electromagnetic field is

$$A^{em} = -zB^{em} \tag{6.11}$$

and, if (6.3) holds,

$$\delta\rho = 2\alpha\partial_x A^{CS} = 0 \ . \tag{6.12}$$

Equation (6.12) holds everywhere but at the border of the sample. In fact, requiring that (6.3) holds everywhere inside each layer, we get

$$A^{CS} = -eA^{em}(z)\,\Theta(x)\,\Theta(L_x - x) \ . \tag{6.13}$$

$\Theta(x)$ being the usual step function. Therefore we have:

$$\delta\rho = -2e\alpha A^{em}(z)\,[\delta(x) - \delta(L_x - x)] \ . \tag{6.14}$$

Notice that now not only $\delta\rho = 0$ inside each layer, but also $\int dx\,\delta\rho = 0$, as the conservation of the total number of particles requires.
Notice also that the total amount of fluid accumulated at each border of every layer is $\int dx\,\delta\rho = \pm 2e\alpha z B^{em}$ which remains finite for $L_x \to \infty$.
We see thus that $\delta\rho$ is not macroscopically large and therefore we expect that its contribution to the energy will not be large.

6.2. Quantitative computation of the orthogonal configuration

In this section we make a more quantitative analysis of the results found above with a somewhat heuristic arguments, in the case where the magnetic field is orthogonal to the layers' plane.
We take as a starting point the hamiltonian (6.4):

$$\frac{H}{L_y L_z} = \int dx \left\{ \frac{1}{2m}\left(|\partial_x\phi|^2 + |eA^{em} + A^{CS}|^2\rho\right) + \frac{d}{2}\left(B_M^{em}\right)^2 + \frac{\lambda}{2}(\delta\rho)^2 \right\} \ . \tag{6.15}$$

We imagine that the region where the magnetic field is different from zero is, in absence of the sample, the interval $-s \le x \le L_x$, see figure 4. We suppose furthermore the total flux of the magnetic field to be fixed. Thus:

$$\frac{\Phi}{L_y} = \int_{-s}^{L_x} dx\, B^{em} = \int_{-s}^{L_x} dx\, B_M^{em} = \text{fixed} \ . \tag{6.16}$$

Here B_M^{em} is the average magnetic field defined by

$$\frac{\Phi}{L_y} = B_M(L - x + s) \ . \tag{6.17}$$

Redefining the zero of the energy by subtracting the constant quantity $\frac{1}{2}\int dx\ (B_M^{em})^2$, we can rewrite the second term in (6.4) as:

$$\frac{d}{2}\int dx\ \left[(B^{em})^2 - (B_M^{em})^2\right] = \frac{d}{2}\int dx\ (B^{em} - B_M^{em})^2 \ . \tag{6.18}$$

Therefore the new hamiltonian is;

$$\frac{H}{L_y L_z} = \int dx\ \left\{\frac{1}{2m}\left(|\partial_x\phi|^2 + |eA^{em} + A^{CS}|^2\rho\right) + \frac{d}{2}(B^{em} - B_M^{em})^2 + \frac{\lambda}{2}(\delta\rho)^2\right\} \ . \tag{6.19}$$

Now we suppose that the sample is placed with an edge at the origin of the x coordinate and that its length in the x-direction is L_x, as in figure 4. We imagine that the sample is much smaller than the region where the magnetic field is different from zero, that is $s \gg L_x$.

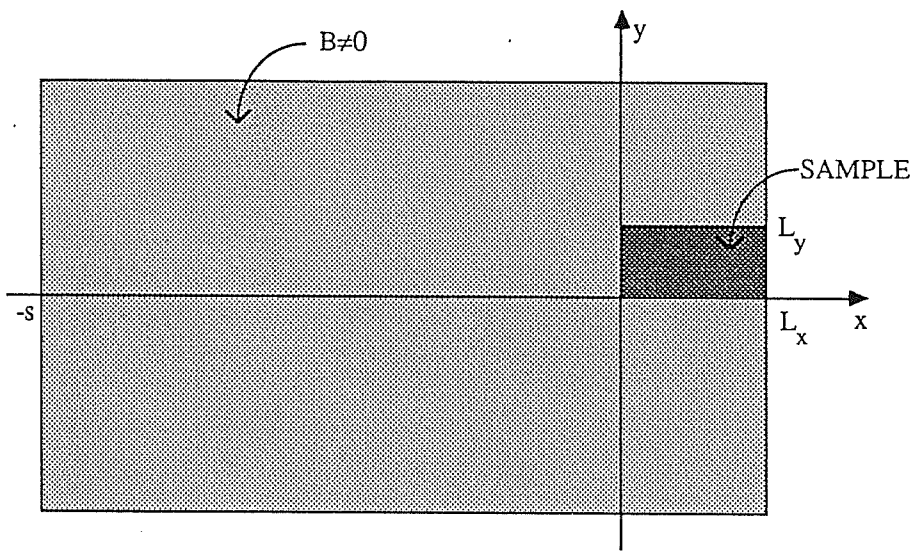

Figure 4

Here for simplicity we treat the penetration of the magnetic field as if it were uniform, rather than exponentially decaying, and we call l_x the penetration depth. Since we have fixed the total value of the magnetic flux we have:

$$\frac{\Phi}{L_y} = (s + l_x)B^{em} = (s + L_x)B_M^{em} \ . \tag{6.20}$$

This leads to:

$$B^{em} = \frac{s + L_x}{s + l_x} B_M^{em} \simeq B_M^{em} \ , \tag{6.21}$$

and to:

$$B^{em} - B_M^{em} = \left(\frac{s + L_x}{s + l_x} B_M^{em} - B_M^{em} \right) = \frac{L_x - l_x}{s + l_x} B_M^{em} \ . \tag{6.22}$$

That is:

$$\frac{d}{2} \int_{-s}^{L_x} dx \, (B^{em} - B_M^{em})^2 \simeq \frac{d}{2} (B_M^{em})^2 \, (L_x - l_x) \ . \tag{6.23}$$

To check the meaningfulness of what we are doing, let us consider the case of the standard superconductor (that is the case $\vec{A}^{CS} = 0, \rho = \rho_0$) and see what happens to the screening. The hamiltonian becomes:

$$\frac{H}{L_y L_z} = \frac{d}{2} \int_{-s}^{L_x} dx \, (B^{em} - B_M^{em})^2 + \frac{e^2 \rho_0}{2m} \int_0^{l_x} dx \, (A^{em})^2 \ . \tag{6.24}$$

Notice that since $A^{em} = x B^{em}$, we have for the second term in (6.24):

$$\frac{e^2 \rho_0}{2m} \int_0^{l_x} dx \, (B^{em})^2 \, x^2 \simeq \frac{e^2 \rho_0}{2m} (B_M^{em})^2 \, \frac{l_x^3}{3} \tag{6.25}$$

that is, using (6.23):

$$\frac{H}{L_y L_z} \simeq \frac{d}{2} (BM)^2 \left(L_x - l_x + \frac{e^2 \rho_0}{md} \frac{l_x^3}{3} \right) \ . \tag{6.26}$$

Minimizing (6.26) with respect to the penetration depth l_x we get:

$$l_x = \sqrt{\frac{md}{e^2 \rho_0}} \ . \tag{6.27}$$

which is very close to the standard value (5.11). So our assumptions make sense. Substituting back in equation (6.26) we get the value of the energy of the standard configuration:

$$\frac{H}{L_y L_z} = \frac{d}{2} (B_M^{em})^2 \left(L_x - \frac{2}{3} l_x \right) \ . \tag{6.28}$$

We will compare this standard result to the energy of the case where the configuration (6.3) is realized. Indeed from what we have learned from the previous section we expect that the actual result will not be very different from the standard result found here. We will check this fact by a variational analysis in subsection 6.2.2.

6.2.1. Detailed discussion of the configuration $\vec{A}^{CS} = -e\vec{A}^{em}$

We consider here the possibility that the screening of the magnetic field could be ruined by means of the cancellation (6.3). Therefore we suppose that the magnetic field penetrates throughout the sample, that is $L_x = l_x$.
As we said in subsection 6.1.1 if (6.3) holds there must be a $\delta\rho^{(M)}$ at the border of the sample, in order to ensure the conservation of the total number of particles.
Thus we suppose that $\delta\rho^{(M)}$ is concentrated in a small, microscopic, region of thickness δ around $x = L_x$, that is:

$$\delta\rho^{(M)} = 2e\alpha B_M^{em} L_x \frac{1}{\delta\sqrt{\pi}} \exp\left[-\frac{(x-x_0)^2}{\delta^2}\right] \tag{6.29}$$

in such a way that

$$\int dx\, \delta\rho^{(M)} = 2e\alpha B_M^{em} L_x \ . \tag{6.30}$$

Let us estimate the various contribution to the energy in this configuration.
First:

$$\int dx\, \frac{1}{2m} |\partial_x \phi|^2 \simeq \frac{1}{2m} \int dx\, \frac{(\partial_x \delta\rho^{(M)})^2}{4\delta\rho^{(M)}} = \frac{1}{2m}\, e\alpha B_M^{em} \frac{L_x}{\delta^2} \ , \tag{6.31}$$

where $\phi = \sqrt{\rho_0 + \delta\rho}$ and thus $\partial_x \phi = \frac{1}{2} \frac{\partial_x \delta\rho^{(M)}}{\sqrt{\rho_0 + \delta\rho}} \simeq \frac{1}{2} \frac{\partial_x \delta\rho^{(M)}}{\sqrt{\delta\rho^{(M)}}}$.
Second:

$$\frac{\lambda}{2} \int_0^{L_x} dx\, \left(-2e\alpha B_M + \delta\rho^{(M)}\right)^2 = 2\lambda e^2 \alpha^2 \left(B_M^{em}\right)^2 L_x \left(\frac{1}{\sqrt{2\pi}} \frac{L_x}{\delta} - 1\right) \ . \tag{6.32}$$

Since $L_x = l_x$, the contribution from the magnetic field, equation (6.23) is zero. Therefore the total energy is:

$$\frac{H}{L_y L_z} = \frac{1}{2m}\, e\alpha B_M^{em} \frac{L_x}{\delta^2} + 2\lambda e^2 \alpha^2 \left(B_M^{em}\right)^2 L_x \left(\frac{1}{\sqrt{2\pi}} \frac{L_x}{\delta} - 1\right) \ . \tag{6.33}$$

We see that the energy gets a contribution proportional to $(BM)^2 \frac{L_x^2}{\delta}$. Therefore compared to the energy of the standard configuration, equation (6.28), we see that the configuration implementing the cancellation as in equation (6.3) has an energy which is larger by a macroscopic factor.
Thus, we can disregard the possibility that the configuration (6.3) holds true throughout the whole sample.

6.2.2. A variational analysis

We study now in some detail the penetration of the magnetic field with a variational approach of the full hamiltonian (6.19). This will allow us to go beyond the approximations of the previous description, and to take into account possible important non-linear effects. Let us make the following ansatz:

$$\begin{aligned}
&B^{em} = B_0^{em} e^{-\chi x} \qquad \Rightarrow \qquad A^{em} = -\frac{B_0^{em}}{\chi} e^{-\chi x} \\
&B_M^{em} = B_0^{em} \\
&A^{CS} = \frac{1}{2\alpha} \int_0^x dx' \delta\rho(x') = -\xi \frac{1}{2\alpha} \rho_0 x e^{-\mu x} \\
&\delta\rho = 2\alpha \partial_x A^{CS} = -\xi \rho_0 (1-\mu x) e^{-\mu x} \\
&\rho = \delta\rho + \rho_0 = \rho_0 \left[1 - \xi(1-\mu x) e^{-\mu x}\right] \ .
\end{aligned} \tag{6.34}$$

Note that $\int dx\, \delta\rho = 0$. The role of the parameter ξ is to leave free the value of $\delta\rho$ at the edge. The goodness of this ansatz can be checked directly on the standard case (6.24) from which we get back the correct value (6.27).

The numerical analysis indicates that $\mu \gg \chi$. Let us assume it for displaying a somewhat simplified expression, verifying *a posteriori* that $\mu \gg \chi$ is indeed realized. One gets to the following expression:

$$\begin{aligned}
\frac{m}{L_y L_z} H = &\frac{e B_0^{em} \rho_0^2}{2\alpha\mu^2} \frac{1}{\chi} \xi + \left[\frac{\rho_0^3}{32\alpha^2\mu^3} + \frac{\lambda m}{8\mu} \rho_0^2 + \mu\rho_0 c(\xi)\right] \xi^2 + \\
&+ \frac{e^2 \rho_0 \left(B_0^{em}\right)^2}{4} \frac{1}{\chi^3} - \frac{3md \left(B_0^{em}\right)^2}{4} \frac{1}{\chi} \ .
\end{aligned} \tag{6.35}$$

Here

$$c(\xi) = \frac{1}{8} \int_0^\infty dx \frac{(2-x)^2 e^{-2x}}{1 - \xi(1-x) e^{-x}} \tag{6.36}$$

is a slowly varying function of ξ, which for ξ small tends to a number of order of unit. We will consider it as a constant. Minimizing this expression with respect to ξ we find

$$\xi = -\frac{1}{\chi} Q B_0^{em} \ , \tag{6.37}$$

where $Q = \dfrac{8e\alpha\mu\rho_0}{\rho_0^2 + 4m\lambda\alpha^2\mu^2\rho_0 + 32\alpha^2\mu^4 c}$. Substituting back in (6.35) and minimizing now with respect to χ we find:

$$l_x \equiv \frac{1}{\chi} = \sqrt{\frac{md}{e^2\rho_0}} \sqrt{1 + \frac{\rho_0^3}{9md\alpha^2\mu^4} Q^2} + \frac{\rho_0}{3e\alpha\mu^2} Q \ . \tag{6.38}$$

We see from equation (6.38) that the penetration depth approaches the standard one for large λ, for which $Q \to 0$. We recall again that a large value of λ is expected because it effectively represents the fact that the system must spend energy to remain electrically neutral when $\delta\rho \neq 0$.
Indeed this results have been confirmed through a numerical minimization with respect to χ and ξ of the hamiltonian which is obtained from (6.19) using the ansatz (6.34), with $\mu = \sqrt{\rho_0}$ (corresponding to a coherence length of ~ 10Å), for various values of B_0^{em}.
We have also verified numerically that taking μ smaller increases the energy of the configuration, confirming that $\mu \gg \chi$ as stated above. In fact, for $\mu \to \infty$ we see that $Q \sim \frac{1}{c}\frac{e\rho_0}{4\alpha\mu^3}$ thus $\xi \to 0$, and $l_x \to \sqrt{\frac{e^2\rho_0}{md}}$. We see thus from equation (6.35) that the value $\mu \to \infty$ formally corresponds to the minimal energy. We have taken μ at its physically reasonable maximum value, that is $\mu \sim \sqrt{\rho_0}$.
One can check that ξ is indeed small for that value, for $\lambda \sim 10$ and $B_0^{em} \lesssim 10^3$ gauss one gets $\xi \lesssim 10^{-2}$ (in all these numerical computations we have taken m to be the mass of the electron, $\sim 250\text{Å}^{-1}$, and $\rho_0 = 4 \cdot 10^{-3}\text{Å}^{-2}$).
We see that the penetration depth is independent of the value of B_0^{em} and that ξ is proportional to $-B_0^{em}$ (that is, $\vec{A}^{CS}$ has the sign opposite to $\vec{A}^{em}$, as if the system would like the configuration (6.3) as far as it is possible).

6.3. Magnetic vortices

In this section we study the penetration of the magnetic field from magnetic vortices. The starting point will be the following hamiltonian:

$$\frac{H}{L_z} = \int d^2r \left\{ \frac{1}{2m} \left| \left(\vec{\nabla} - ie\vec{A}^{em} - i\vec{A}^{CS} \right) \phi \right|^2 + \frac{d}{2}\left(B^{em}\right)^2 + \frac{\lambda}{2}(\delta\rho)^2 \right\} . \tag{6.39}$$

We look for solutions of the form:

$$\phi(r,\theta) = f(r)e^{in\theta} , \tag{6.40}$$

n is integer and represent the vorticity.
Substituting (6.40) in (6.39) we get:

$$\frac{H}{L_z} = \int d^2r \left\{ \frac{1}{2m} \left[\left(\frac{d}{dr} f \right)^2 + \frac{1}{r^2} \left(n - erA_\theta^{em} - rA_\theta^{CS} \right)^2 f^2 \right] + \frac{d}{2}\left(B^{em}\right)^2 + \frac{\lambda}{2}(\delta\rho)^2 \right\} . \tag{6.41}$$

Finiteness of (6.41) requires:

$$\begin{aligned}
&f(0)=0 && \Rightarrow && \delta\rho(0)=-\rho_0 \\
&\lim_{r\to\infty}\delta\rho=0 && \Rightarrow && \lim_{r\to\infty} f=\sqrt{\rho_0} \\
&\lim_{r\to\infty} A_\theta^{em}=\frac{n}{er} \\
&\lim_{r\to\infty} A_\theta^{CS}=0\ .
\end{aligned} \tag{6.42}$$

We solve this hamiltonian in a variational way with the following ansatz, which satisfies (6.42):

$$\begin{aligned}
&erA_\theta^{em}=n\left(1-e^{-\chi^2r^2}\right) && \Rightarrow && B=\frac{1}{r}\frac{d}{dr}(rA_\theta)=\frac{2n}{e}\chi^2e^{-\chi^2r^2} \\
&rA_\theta^{CS}=-\frac{1}{4\alpha}\rho_0r^2e^{-\mu^2r^2} \\
&\delta\rho=2\alpha\frac{1}{r}\frac{d}{dr}(rA_\theta^{CS})=-\rho_0(1-\mu^2r^2)e^{-\mu^2r^2} \\
&f^2=\rho_0-\rho_0(1-\mu^2r^2)e^{-\mu^2r^2}\ .
\end{aligned} \tag{6.43}$$

Notice that $\int_0^\infty d^2r\,\delta\rho=0$, therefore there is no missing $\delta\rho^{(M)}$. Later on, we will compare this configuration with a configuration where $\vec{A}^{CS}=-e\vec{A}^{em}$ and we will need $\delta\rho^{(M)}\neq 0$ like in the discussion of subsection 6.1.1.

Notice also that in this case, differently from the case treated in the previous section the value of $\delta\rho$ at the origin is fixed to zero by the requirement of finite energy, see equation (6.41), so there is no ξ parameter.

With this ansatz we get, supposing $\mu\gg\chi$, to be later verified:

$$\frac{H}{L_z}\simeq\frac{\rho_0\pi}{2m}\left(\frac{3n\rho_0}{8\alpha\mu^2}+n^2\log\frac{\mu^2}{2\chi^2}+\frac{2mdn^2\chi^2}{e^2\rho_0}+\frac{\rho_0m\lambda}{4\mu^2}\right)\ . \tag{6.44}$$

Minimizing (6.44) with respect to χ^2 one finds easily:

$$\chi^2=\frac{e^2\rho_0}{2md}\ . \tag{6.45}$$

Therefore we recover the penetration depth we had found in subsection 5.1.3 studying the case with the electrostatic interaction:

$$l_x=\frac{1}{\chi}=\sqrt{\frac{2md}{e^2\rho_0}}\ . \tag{6.46}$$

Notice that this penetration depth is independent of λ.

Minimizing (6.44) with respect to μ we find:

$$\mu^2 = \frac{3\rho_0}{8n\alpha} + \frac{m\lambda\rho_0}{4n^2} \ , \tag{6.47}$$

which corresponds to a coherence length:

$$r_v = \frac{1}{\mu} = \sqrt{\frac{8\alpha n^2}{3n\rho_0 + 2\alpha\rho_0 m\lambda}} \ . \tag{6.48}$$

We carried over also a minimization of the exact hamiltonian (6.41) with respect to the parameters χ and μ, for various values of λ. This have been done numerically taking for the parameters the values of equation (5.19).
We find a result that essentially confirms the previous approximate analysis. In particular we find $l_x \simeq 1167$Å for all the different values of λ, which is precisely the value of the standard penetration depth (6.46). For the correlation length r_v we find values which confirm equation (6.48) with a good approximation, and are of the order of few Angstroms, confirming our previous assumption that $\mu \gg \chi$.
Substituting (6.46) and (6.48) in (6.44) we find the energy of the configuration of one vortex:

$$\frac{H}{L_z} \simeq \frac{\rho_0\pi}{2m}\left(\frac{3n\rho_0}{8\alpha}r_v^2 + n^2\log\frac{md}{e^2\rho_0 r_v^2} + n^2 + \frac{m\lambda\rho_0 r_v^2}{4}\right) \ . \tag{6.49}$$

6.3.1. The $\vec{A}^{CS} = -e\vec{A}^{em}$ configuration with rotational symmetry

We now discuss, like in subsection 6.2.1, the possible cancellation (6.3) in the case of a configuration which has a rotational symmetry, and the flux of B^{em} is given, like for the vortices case discussed above. We will compare it with the standard vortex configuration of the previous section. As stated in previous discussion, the configuration (6.3) requires an unavoidable missing $\delta\rho^{(M)}$.
We suppose to have a fixed value of the magnetic flux:

$$\Phi(B) = \int d^2r\, B^{em} = \frac{2\pi}{e} n_T \ . \tag{6.50}$$

n_T here is the total vorticity, that is the sum of the vorticity of each single vortex. Therefore

$$\int d^2r\, \delta\rho = 2\alpha \int d^2r\, \vec{\nabla} \wedge \vec{A}^{CS} = -2e\alpha \int d^2r\, B^{em} = -2\alpha e\pi R_0^2 B^{em} = -4\pi\alpha n_T \ , \tag{6.51}$$

where R_0 is the radius of the sample, supposed to be a disk.

So to have conservation of the number of particles we need a $\delta\rho^{(M)}$ of the form:

$$\delta\rho^{(M)} = \frac{2\alpha n_T}{R_0}\frac{1}{\delta\sqrt{\pi}}\exp\left[-\frac{(r-R_0)^2}{\delta^2}\right] , \tag{6.52}$$

where the thickness δ is supposed to be microscopic. Note that

$$\int d^2r\,\delta\rho^{(M)} = 4\pi\alpha n_T . \tag{6.53}$$

We have put the missing density $\delta\rho^{(M)}$ at the edge of the disk for reasons very similar to those discussed in subsection 6.1.1.

Let us estimate the most relevant contributions to the energy $\frac{H}{L_z}$ coming from the presence of $\delta\rho^{(M)}$. We write:

$$\frac{H}{L_z} = \left(\frac{H}{L_z}\right)_1 + \left(\frac{H}{L_z}\right)_2 + \left(\frac{H}{L_z}\right)_3 . \tag{6.54}$$

We find first

$$\left(\frac{H}{L_z}\right)_1 = \frac{1}{2m}\int d^2r\,|D\phi|^2 \simeq \frac{1}{8m}\int d^2r\,\frac{1}{\delta\rho^{(M)}}\left(\frac{d}{dr}\delta\rho^{(M)}\right)^2 = \frac{1}{2m}\frac{\pi\alpha n_T}{\delta^2} . \tag{6.55}$$

Second:

$$\left(\frac{H}{L_z}\right)_2 = \frac{\lambda}{2}\int d^2r\,(\delta\rho)^2 = \lambda\left(\frac{\sqrt{\pi}}{\delta} - \frac{4\pi}{R_0}\right)\frac{2\alpha^2 n_T^2}{R_0} . \tag{6.56}$$

Third:

$$\left(\frac{H}{L_z}\right)_3 = \frac{d}{2}\int d^2r\,(bem)^2 = \frac{2\pi^2}{e^2}\frac{dn_T^2}{\pi R_0^2} . \tag{6.57}$$

We can distinguish two cases.

a) $n_T = 1$ (or few units). Then the most relevant energy contribution due to $\delta\rho^{(M)}$ comes from $\left(\frac{H}{L_z}\right)_1$, since the other two pieces are suppressed, at least, by the factor $\frac{1}{R_0}$, with R_0 macroscopic. This energy (for $\delta^2 \sim \frac{1}{\rho_0}$) is less or equal to the free energy of the standard configuration (6.49). Therefore for a small flux, that is for a very small magnetic field, the configuration where $\vec{A}^{CS}$ cancels $e\vec{A}^{em}$ is possibly favourite.

b) Now we suppose B^{em} macroscopic, in other words B^{em} is fixed in the macroscopic limit $R_0 \to \infty$. Therefore from equation (6.51) $n_T \sim B^{em}R_0^2 \to \infty$. In this case the configuration where $\vec{A}^{CS}$ cancels $e\vec{A}^{em}$ gets the most relevant energy from $\left(\frac{H}{L_z}\right)_2$, namely from the piece proportional to $\frac{n_T^2}{\delta R_0}$. Therefore, for this configuration

$$\frac{H}{L_z} \simeq \frac{\lambda}{8}\sqrt{\pi}4e^2\alpha^2\,(B^{em})^2\,\frac{R_0^3}{\delta} + \text{less important} . \tag{6.58}$$

We have to compare it with the energy of the standard vortex configuration, equation (6.49) multiplied by n_T, that is:

$$\frac{H}{L_z} \simeq c\,\frac{\rho_0 \pi}{2m} B^{em} R_0^2 \ , \tag{6.59}$$

where c is of the order of $\rho_0 r_v^2$, i.e. a finite number. Since $\frac{R_0}{\delta} \to \infty$, clearly the standard configuration, or also a configuration of many standard vortices, is energetically favourite.

6.4. Magnetic field parallel to the layers

In this section we put our attention to the configuration in which the magnetic field $\vec{B}^{em}$ is parallel to the layers' plane and study the screening effects in absence of the electrostatic interaction.
With considerations very similar to those made at the beginning of section 6.2 we get, in this configuration, to the hamiltonian:

$$\begin{aligned}\frac{H}{L_y} = \int dxdz \left\{ \frac{1}{2m}\left[|\partial_x \phi|^2 + c_J\,|\partial_z \phi|^2\right] + \frac{1}{2m}\left|eA^{em} + A^{CS}\right|^2 \rho + \right. \\ \left. + \frac{d}{2}(B^{em} - B_M^{em})^2 + \frac{\lambda}{2}(\delta\rho)^2 \right\} \ ,\end{aligned} \tag{6.60}$$

here c_J is a constant accounting for the Josephson coupling between the layers and it is related to the constant j_0 used in subsection 5.2.1 by $c_J = \frac{2md^2 j_0}{e^2 \rho_0}$.
We first discuss the standard case with $\vec{A}^{CS} = 0$ and $\delta\rho = 0$. We have:

$$\frac{H}{L_y} = \int dxdz \left\{ \frac{e^2 \rho_0}{2m}\left[A^{em}(z)\right]^2 + \frac{d}{2}(B^{em} - B_M^{em})^2 \right\} \ . \tag{6.61}$$

Since $A^{em}(z) = -zB_M^{em}$ this integral yields:

$$\frac{H}{L_z} = \frac{(B_M^{em})^2\, d}{2} L_x \left(\frac{e^2 \rho_0}{3md} l_z^3 + L_z - l_z \right) \ . \tag{6.62}$$

Minimizing (6.62) with respect to l_z we find:

$$\frac{\delta}{\delta l_z}\left(\frac{H}{L_y}\right) = \frac{(B_M^{em})^2}{2} L_x \left(\frac{e^2 \rho_0}{md} l_z^2 - 1 \right) = 0 \qquad\qquad l_z = \sqrt{\frac{md}{e^2 \rho_0}} \ , \tag{6.63}$$

which is the standard result.
Substituting back in (6.62) we find the energy of the standard configuration:

$$\frac{H}{L-y} = \frac{d}{2}\,(B_M^{em})^2\,L - x\left(L_z - \frac{2}{3}l_z\right) \ . \tag{6.64}$$

To this value of the energy we will compare that of the (6.3) configuration, that is:

$$A^{CS}(x,z) = -eA^{em}(z)\,[\Theta(x)\Theta(L_x - x)] \ . \tag{6.65}$$

This yields:

$$\delta\rho(x,z) = 2\alpha\partial_x A^{CS} = -2e\alpha A^{em}\,[\delta(x) - \delta(L_x - x)] \ . \tag{6.66}$$

Here, as we did in the previous section, we suppose that the fluid density is confined in a microscopic region of thickness δ so we approximate the δ-functions with

$$\delta(x) \simeq \frac{1}{\sqrt{\pi}\delta}\exp\left[-\frac{x^2}{\delta^2}\right] \ . \tag{6.67}$$

Therefore we have:

$$\delta\rho(x,z) = -2e\alpha\frac{1}{\sqrt{\pi}\delta}\left\{\exp\left[-\frac{x^2}{\delta^2}\right] - \exp\left[-\frac{(L_x - x)^2}{\delta^2}\right]\right\}A^{em}(z) \ . \tag{6.68}$$

Keeping this configuration, let us assume that the magnetic field penetrates in the z direction within a length l_z and let us estimate it. We begin by estimating the various contributions to the energy in this configuration disregarding the terms proportional to $\exp\left(-\frac{L_x^2}{2\delta^2}\right) \simeq 0$. First:

$$\frac{1}{2m}\int dxdz\ |\partial_x\phi|^2 = \frac{e^2\alpha^2}{m\rho_0}\frac{1}{\sqrt{2\pi}}\frac{1}{\delta^3}\int_0^{l_z} dz\ [A^{em}(z)]^2 \ , \tag{6.69}$$

where we used the fact that $\partial_x\phi = \frac{1}{2}\frac{\partial_x(\delta\rho)}{\sqrt{\delta\rho + \rho_0}} \simeq \frac{1}{2\sqrt{\rho_0}}\partial_x(\delta\rho)$.
Second:

$$\frac{c_J}{2m}\int dxdz\ |\partial_z\phi|^2 = \frac{c_J e^2\alpha^2}{2m\rho_0}\frac{1}{\sqrt{2\pi}}\frac{1}{\delta}\int_0^{l_z} dz\ [\partial_z A^{em}(z)]^2 \ . \tag{6.70}$$

Third:

$$\frac{\lambda}{2}\int dxdz\,\delta\rho = 2\lambda e^2\alpha^2\frac{1}{\sqrt{2\pi}}\frac{1}{\delta}\int_0^{l_z} dz\ [A^{em}(z)]^2 \ . \tag{6.71}$$

Fourth:

$$\frac{d}{2}\int dxdz\,(B^{em}-B_M^{em})^2=\frac{d}{2}\,(B_M^{em})^2\,L_x(L_z-l_z)\ , \tag{6.72}$$

(here to get (6.72) we have used arguments similar to those that led to (6.23)).
Now putting it all together, and using the fact that $A^{em}(z)=-zB_M^{em}$, we arrive at:

$$\frac{H}{L_y}=\frac{4e^2\alpha^2}{m}\frac{1}{\sqrt{2\pi}}\frac{(B_M^{em})^2}{\delta}\left[\left(\frac{1}{4\rho_0\delta^2}+\frac{m\lambda}{2}\right)\frac{l_z^3}{3}+\frac{c_J}{8\rho_0}l_z\right]+\frac{d}{2}\,(B_M^{em})^2\,L_x(L_z-l_z)\ . \tag{6.73}$$

Minimizing equation (6.73) with respect to l_z we find:

$$l_z=\sqrt{\frac{L_x}{\Omega}+\frac{c_J\delta^2}{2+4\rho_0 m\lambda\delta^2}}\simeq\sqrt{\frac{L_x}{\Omega}}\ , \tag{6.74}$$

where $\Omega=\frac{2}{md}\frac{1}{\sqrt{2\pi}}4e^2\alpha^2\frac{1}{\delta}\left(\frac{1}{4\rho_0\delta^2}+\frac{m\lambda}{2}\right)$.
This means that when the magnetic field is parallel we do not have screening in the usual sense because $l_z\to\infty$ for $L_x\to\infty$. But we find a "quasi screening" in the sense that $\frac{l_z}{L_x}\to 0$, just as we found in the previous chapter.
Substituting this result back in (6.73), we find the energy of the configuration (6.3):

$$\frac{H}{L_y}\simeq\frac{d}{2}\,(BM)^2\,L_xL_z-\frac{d}{6}\,(BM)^2\,(L_x)^{3/2}(\Omega)^{-1/2}\ . \tag{6.75}$$

Comparing this equation with equation (6.64) we see that (6.64) is always greater than (6.75) for L_x macroscopic. So the configuration (6.3), in the case where $\vec{B}$ is parallel to the layers' plane is always favourite. Nevertheless the behaviour of the penetration of the magnetic field is qualitatively the same as in the standard configuration studied in section 5.2.

7. Chiral property

We have seen in chapter 3 that the low-lying excitations correspond to currents which are circularly polarized if the energy of the excitation is that of the gap, see equation (3.21). In this chapter we show another feature of our fluid in which emerges its chiral property. We consider a non-polarized electromagnetic wave perpendicular incident on a thin film of our fluid. We expect that if the energy of the incoming wave is close to the gap it interacts with the charged currents mentioned above getting a polarization. Indeed this is exactly what happens and will be described in what follows.
Similar studies have appeared in the literature for other kinds of **T**- and **P**-breaking theories, see in particular references [10] [49].
We consider a free, unpolarized electromagnetic wave propagating in the positive z direction incoming perpendicularly on a thin layer of the chiral fluid in the x-y plane. We take the layer to be at $z=0$. The total system will be described by the lagrangian density

$$\mathcal{L} = \frac{1}{4}F_{ij}F_{ij} + \mathcal{L}_I\delta(z) \ . \tag{7.1}$$

Here the first term is the usual Maxwell lagrangian for the electromagnetic field and the second term represents the interaction of the electromagnetic wave with the chiral fluid. As usual we analyze this lagrangian in the small deformation approximation. Since the electromagnetic wave is orthogonal to the plane, the components of the electromagnetic vector potential different from zero will be A_x and A_y. Let us introduce the notation $\vec{A} = (A_x, A_y)$, thus $\vec{A}$ is a two-dimensional vector lying on the layer's plane. To find $\mathcal{L}_I$ we simply rewrite the lagrangian for the free chiral fluid, equation (3.3), adding in the covariant derivative also the two components of the electromagnetic potential $\vec{A}^{em}$:

$$\vec{D}(\vec{A}^{CS}) \to \vec{D}(\vec{A}^{CS} + e\vec{A}) \ . \tag{7.2}$$

In the small deformation approximation this leads to

$$\mathcal{L}_I = \theta\vec{\nabla}\cdot\dot{\vec{u}} - \frac{\rho_0}{2m}\left(\vec{\nabla}\theta - \frac{1}{2\alpha}\tilde{\vec{u}} + e\vec{A}\right)^2 - \frac{1}{8m\rho_0}(\triangle\vec{u})^2 - \frac{\lambda}{2}\left(\vec{\nabla}\cdot\vec{u}\right)^2 \ . \tag{7.3}$$

Remember that, for a generic two-dimensional vector $\vec{V}$ we define $\tilde{\vec{V}}$ to be:

$$\tilde{V}_i = \epsilon_{ij}V_j \ . \tag{7.4}$$

We stress that this is a lagrangian density on the plane: all the vector and the derivative operators are two-dimensional.

Performing the variation with respect to θ we find

$$\frac{\delta \mathcal{L}_I}{\delta \theta} = \vec{\nabla} \cdot \dot{\vec{u}} + \frac{\rho_0}{m} \vec{\nabla} \cdot \left(\vec{\nabla}\theta - \frac{1}{2\alpha} \tilde{\vec{u}} + e\vec{A} \right)^2 = 0 \ . \tag{7.5}$$

Since the vector $\vec{u}$ is irrotational we have $\vec{\nabla} \cdot \tilde{\vec{u}} = 0$. We consider $\vec{A}(x,y)$ to be a function of the (x,y) coordinates, therefore it carries some momentum $\vec{p}$ in the plane. It can be figured as a spot of light. We assume that the size of the spot is smaller than the layer's size. Later we will take the limit $\vec{p} \to 0$ in which the sizes of both the layer and the spot go to infinity. We decompose the vector $\vec{A}$ in its longitudinal and its transverse part $\vec{A} = \vec{A}_L + \vec{A}_\perp$, that is $\vec{\nabla} \wedge \vec{A}_L = \vec{\nabla} \cdot \vec{A}_\perp = 0$. Since by definition $\vec{\nabla} \cdot \vec{A}_\perp = 0$, we have from (7.5):

$$\vec{\nabla}\theta = -\frac{m}{\rho_0} \dot{\vec{u}} - e\vec{A}_L \ . \tag{7.6}$$

Then the lagrangian (7.3) can be rewritten as:

$$\mathcal{L}_I = -\dot{\vec{u}} \cdot \vec{\nabla}\theta - \frac{\rho_0}{2m} \left(\vec{\nabla}\theta + e\vec{A}_L \right)^2 - \frac{\rho_0}{2m} \left(e\vec{A}_\perp - \frac{1}{2\alpha} \tilde{\vec{u}} \right)^2 - \frac{1}{8m\rho_0} (\triangle \vec{u})^2 - \frac{\lambda}{2} \left(\vec{\nabla} \cdot \vec{u} \right)^2 \ . \tag{7.7}$$

Introducing the new parameterization $\vec{A}_L = \vec{\nabla}\varphi$ and $\vec{A}_\perp = \tilde{\vec{\nabla}}\psi$, equation (7.7), due to (7.6), becomes

$$\mathcal{L}_I = \frac{m}{2\rho_0} \dot{\vec{u}}^2 + e\dot{\vec{u}} \cdot \vec{\nabla}\varphi - \frac{e^2\rho_0}{2m} \left(\vec{\nabla}\psi \right)^2 - \frac{m}{2\rho_0} \mathcal{E}_{GAP}^2 \vec{u}^2 + e\mathcal{E}_{GAP} \vec{u} \cdot \vec{\nabla}\psi - \frac{1}{8m\rho_0} (\triangle \vec{u})^2 - \frac{\lambda}{2} \left(\vec{\nabla} \cdot \vec{u} \right)^2 \ . \tag{7.8}$$

Taking $\vec{u} = \vec{u}_0 e^{i(\omega t + \vec{p} \cdot \vec{x})}$ we find

$$\mathcal{L}_I = \frac{m}{2\rho_0} \left(\omega^2 - \mathcal{E}_{GAP}^2 - \frac{\lambda\rho_0}{m} |\vec{p}|^2 - \frac{1}{4m^2} |\vec{p}|^4 \right) \vec{u}^2 + e\vec{u} \cdot \left(i\omega \vec{\nabla}\varphi + \mathcal{E}_{GAP} \vec{\nabla}\psi \right) - \frac{e^2\rho_0}{2m} \left(\vec{\nabla}\psi \right)^2 \ . \tag{7.9}$$

By functionally integrating out the $\vec{u}$ field, and using the fact that

$$\vec{\nabla}\varphi = \frac{p_i A_i}{|\vec{p}|^2} \vec{p} \qquad \vec{\nabla}\psi = \frac{\epsilon_{ij} A_i p_j}{|\vec{p}|^2} \vec{p} \ , \tag{7.10}$$

we get the interaction lagrangian expressed as a quadratic term in $\vec{A}$ and representing the effective electromagnetic interaction between the fluid and the incoming wave. We express it in a convenient matricial form:

$$\mathcal{L}_I = -\frac{1}{2} A^\dagger \hat{\mathcal{L}} A \ , \tag{7.11}$$

where

$$\hat{\mathcal{L}} = \frac{e^2\rho_0}{m|\vec{p}|^2}\left(\frac{1}{\omega^2 - \mathcal{E}_{GAP}^2 - \frac{\lambda\rho_0}{m}|\vec{p}|^2 - \frac{1}{4m^2}|\vec{p}|^4} M_1 + M_2\right) . \tag{7.12}$$

The matrices M_1 and M_2 are given by:

$$\begin{aligned} M_1 &= \begin{pmatrix} |ip_x\omega + p_y\mathcal{E}_{GAP}|^2 & (ip_x\omega + p_y\mathcal{E}_{GAP})^*(ip_y\omega - p_x\mathcal{E}_{GAP}) \\ (ip_y\omega - p_x\mathcal{E}_{GAP})^*(ip_x\omega + p_y\mathcal{E}_{GAP}) & |ip_y\omega - p_x\mathcal{E}_{GAP}|^2 \end{pmatrix} \\ M_2 &= \begin{pmatrix} p_y^2 & -p_xp_y \\ -p_xp_y & p_x^2 \end{pmatrix} . \end{aligned} \tag{7.13}$$

Here we have introduced the following notation:

$$A = \begin{pmatrix} A_x \\ A_y \end{pmatrix} . \tag{7.14}$$

Let us now discuss the interaction of the electromagnetic wave with the layer in three dimensions. The electromagnetic wave is described by $A = A(z,\vec{x})e^{i\omega t}$, where we use the notation of equation (7.14). As we said, we will eventually take the limit in which A does not depend on $\vec{x}$. Thus we will consider a Fourier component:

$$A(z,\vec{x}) = A(z,\vec{p})e^{i\vec{p}\cdot\vec{x}} \tag{7.15}$$

and later on we will take the limit $\vec{p}\to 0$.
Strictly speaking, when the electromagnetic wave carries a momentum $\vec{p}$ along the layer's plane there will be also a non-vanishing $z-$component of the vector potential. We neglect it in view of the limit $\vec{p}\to 0$.
In three dimensions, the lagrangian for A, including the interaction with the layer becomes:

$$\mathcal{L}(A) = \frac{1}{2}\omega^2 A^2 - \frac{1}{2}\left[p^2A^2 + (\partial_z A)^2\right] - \frac{1}{2}A^\dagger\,\hat{\mathcal{L}}\,A\,\delta(z) . \tag{7.16}$$

From equation (7.16) we derive the equation for $A(z,\vec{p})$:

$$\partial_z^2 A + (\omega^2 - p^2)A - \hat{\mathcal{L}}\,A\,\delta(z) = 0 . \tag{7.17}$$

$A(z)$ can be written in terms of onward and backward planar waves:

$$A(z) = \begin{cases} \alpha_- e^{ikz} + \beta_- e^{-ikz} & \text{if } z < 0 \\ \alpha_+ e^{ikz} & \text{if } z > 0 . \end{cases} \tag{7.18}$$

From (7.17) we get that $\omega = \sqrt{k^2+p^2} \approx k$ (since $k^2 \gg p^2$) and we impose at $z=0$ continuity for $A(z)$ and a discontinuity for its derivative such as to match the coefficient of $\delta(z)$. We thus get:

$$\alpha_+ = \frac{2ik}{2ik - \hat{\mathcal{L}}}\alpha_- \qquad \beta_- = \alpha_+ - \alpha_- = \frac{\hat{\mathcal{L}}}{2ik - \hat{\mathcal{L}}}\alpha_- \ . \tag{7.19}$$

From equation (7.19) we can read the matrices of reflection and transmission:

$$R = \frac{\beta_-}{\alpha_-} = \frac{\dfrac{\hat{\mathcal{L}}}{2ik}}{1 - \dfrac{\hat{\mathcal{L}}}{2ik}} \qquad T = \frac{\alpha_+}{\alpha_-} = \frac{1}{1 - \dfrac{\hat{\mathcal{L}}}{2ik}} \ . \tag{7.20}$$

Notice that $R = T - 1$ and $|T|^2 + |R|^2 = 1$ as it should.
Let us take now the limit $\vec{p} \to 0$. We get

$$\hat{\mathcal{L}} = \frac{e^2\rho_0}{m}\frac{1}{\omega^2 - \mathcal{E}_{GAP}^2}\begin{pmatrix} \omega^2 & i\omega\mathcal{E}_{GAP} \\ -i\omega\mathcal{E}_{GAP} & \omega^2 \end{pmatrix} \ . \tag{7.21}$$

We can then compute T obtaining:

$$T = \frac{1}{\omega^2 - \mathcal{E}_{GAP}^2 - \dfrac{e^2\rho_0}{2im}\omega\left(2 - \dfrac{e^2\rho_0}{2im\omega}\right)}\begin{pmatrix} \omega^2 - \mathcal{E}_{GAP}^2 - \dfrac{e^2\rho_0}{2im}\omega & \dfrac{e^2\rho_0}{2m}\mathcal{E}_{GAP} \\ -\dfrac{e^2\rho_0}{2m}\mathcal{E}_{GAP} & \omega^2 - \mathcal{E}_{GAP}^2 - \dfrac{e^2\rho_0}{2im}\omega \end{pmatrix} \tag{7.22}$$

We see that for $\omega \to \mathcal{E}_{GAP}$

$$T = \frac{1}{2 - \dfrac{e^2\rho_0}{2im\omega}}\begin{pmatrix} 1 & -i \\ i & 1 \end{pmatrix} \ . \tag{7.23}$$

Let us consider the following parameterization:

$$\begin{aligned} A_x &= \mathrm{Re}\left(\cos\theta e^{-i\omega t}\right) = \cos\theta\cos\omega t \\ A_y &= \mathrm{Re}\left(\sin\theta e^{i\varphi}e^{-i\omega t}\right) = \sin\theta\cos(\varphi - \omega t) \ . \end{aligned} \tag{7.24}$$

We can see that the circular polarization is for $\theta = \dfrac{\pi}{4}$ and $\varphi = \dfrac{\pi}{2}$, so that:

$$A_x = \frac{\sqrt{2}}{2}\cos\omega t \qquad A_y = \frac{\sqrt{2}}{2}\sin\omega t \ . \tag{7.25}$$

In our complex formalism this corresponds to:

$$A = \begin{pmatrix} \cos\theta \\ \sin\theta e^{i\varphi} \end{pmatrix} e^{-i\omega t} = \frac{\sqrt{2}}{2}\begin{pmatrix} 1 \\ i \end{pmatrix} e^{-i\omega t} \ . \tag{7.26}$$

Thus we see that T projects a state in a circularly polarized one, that is we can write:

$$T = \frac{1}{2 - \frac{e^2 \rho_0}{2im\omega}} |c\rangle\langle c| \tag{7.27}$$

where

$$|c\rangle = \begin{pmatrix} 1 \\ i \end{pmatrix} \tag{7.28}$$

is the circularly polarized vector.
Therefore we have found that for $\omega \to \mathcal{E}_{GAP}$ our chiral planar system behaves like a perfect polarizer.
Note that if instead we take $\omega \to \infty$ we get:

$$T \to \begin{pmatrix} 1 & 0 \\ 0 & 1 \end{pmatrix} \tag{7.29}$$

so we have lost any polarizing effect.
Conversely, for $\frac{\omega}{\mathcal{E}_{GAP}} \ll 1$ (and still $\frac{p}{\omega} \ll 1$) we get

$$T = \frac{1}{1+r^2} \begin{pmatrix} 1 & -r \\ r & 1 \end{pmatrix} , \tag{7.30}$$

where, remembering that $\alpha = \frac{\kappa}{4\pi}$ (see footnote at section 3.3 and also appendix A),

$$r = \frac{e^2 \rho_0}{2m\mathcal{E}_{GAP}} = e^2 |\alpha| = \frac{e^2}{4\pi}\kappa \simeq \frac{1}{137}\kappa . \tag{7.31}$$

Therefore, for κ of the order of few units, T is very near to the identity and the polarization effect is very weak.
Thus, like in chapter 3 where we have studied the chiral behaviour of the currents associated to the small deformations of the fluid, we see that the chirality property of the system manifest itself only when the energies involved are of the order of the gap.
An electromagnetic wave having the energy of the gap (taking for the parameters the values of equation (5.19) we find for $\mathcal{E}_{GAP}$ an energy corresponding to $\sim 2 \cdot 10^{13}$ Hz) would have a wavelength of the order of about 10^2 times the wavelength of the visible light, this would correspond to an infrared wave.
To our knowledge, experiments aiming of measuring such polarizing effects have been made only with visible light. They have not revealed any polarization. This failure can be essentially motivated with the experimental difficulty in isolate one single layer*. So one can

* We thank Pier Alberto Marchetti for bringing our attention to this fact.

expect that the two layers could be coupled in such a way to polarize the electromagnetic wave in two different directions, in such a way that the total polarizing effect results to be zero. Of course there is also the possibility that, as suggested by the computation we have presented above, the range of energy in which the system is sensible to chirality may be different from that of visible light.

To overcome the problem of isolating one single layer other experiments have been realized. In particular let us quote the experiment of reference [11] in which the authors made a local test of chirality, and therefore in principle not perturbed by possible opposite chiral behaviour of the layers nearby, by mean of a muon placed very close to one layer and measuring the possible variation of its magnetic moment. Also this attempt has not given out any sign of chirality.

A possible way out to this negative experimental result could be that, possibly, these kind of experiments are not sensitive to the range of energy near to the above mentioned resonance, where chirality becomes manifest.

Appendix A

This appendix is devoted to describe the connection between our presentation of the chiral fluid and the standard mean-field Chern-Simons description of anyons. One can in principle forget about anyons in all the consideration we made above (and, in fact, this is precisely what we did), but nevertheless it can be useful to keep the contact of the two different languages and approaches.
In the Chern-Simons description of Anyons, which we are not going to review here, one introduces a Chern-Simons gauge field $\vec{A}^{CS}$ (from now on, in this appendix, will omit the notation with CS and simply write $\vec{A}^{CS} \to \vec{A}$), whose field strength is proportional to the density (for a review see [17]):

$$\vec{\nabla} \wedge \vec{A} = \frac{1}{2\alpha}\rho \ . \tag{A.1}$$

For coherence with the convention mostly used in the literature we redefine the Chern-Simons parameter introducing $\kappa = 4\pi\alpha$.
In order to make precise the formulation it is very convenient to consider periodic boundary conditions, that is to take a torus [16] [50] [51] [52].
In this way one gets that the eigenstates of the full quantum solution of the mean-field theory (even neglecting the fluctuations) are also eigenstates of the total momentum.
Due to the non-trivial topological properties of the torus one has to take into account the topological components of the gauge potential defined by:

$$a_x = \oint dx A_x \qquad a_y = \oint dy A_y \tag{A.2}$$

here the two integrals are performed along the two non-trivial loops of the torus. They are position independent and therefore their field strength is zero.

$$\vec{\nabla} \wedge \vec{a} = 0 \ . \tag{A.3}$$

For this reason they are also called "flat connections"
Let us thus study the effective hamiltonian inspired by this version of the anyon mean-field, ψ being an effective bosonic field,

$$H = \int d^2x \int d^2a \left\{ \frac{1}{2m}|\vec{D}\psi|^2 + c\left|\left(\frac{\kappa}{4\pi}a_i + i\,\epsilon_{ij}\frac{\partial}{\partial a_j}\right)\psi\right|^2 \right\} \tag{A.4}$$

where the covariant derivative is

$$D_i = \partial_i + \frac{i\pi}{\kappa}\rho_0\epsilon_{ij}x_j - i\frac{a_i}{L} - i\tilde{A}_i \qquad D_i = \partial_i - iA_i \qquad A_i = -\frac{\pi}{\kappa}\rho_0\epsilon_{ij}x_j + \frac{a_i}{L} + \tilde{A}_i \ . \tag{A.5}$$

Here L is the length of the side of the torus (we are supposing, for simplicity that our torus is a square with identified edges), ρ_0, as usual is the mean density. Therefore $\int d^2x\,\rho_0 = N$ is the fixed total particles' number. The gauge field is determined by the constraint (A.1) and is expressed as the sum of three parts

$$\vec{A} = \vec{A}_M + \tilde{\vec{A}} + \vec{a}\ . \tag{A.6}$$

$A_{Mi} = -\frac{\pi}{\kappa}\rho_0\epsilon_{ij}x_j$ is the "mean-field" part. Its curl yields the mean magnetic field

$$\vec{\nabla} \wedge \vec{A}_M = B_M = \frac{2\pi}{\kappa}\rho_0\ . \tag{A.7}$$

$\tilde{A}_i$ is the "fluctuating" part of A_i such that

$$\vec{\nabla} \wedge \tilde{\vec{A}} = \frac{2\pi}{\kappa}\delta\rho\ . \tag{A.8}$$

$\vec{a}$ is the above mentioned flat connection.
κ is a constant which represents the Chern-Simons coupling constant and can be related to the anyon statistics [17]. c is a positive constant whose value can be arbitrary in what follows. In the anyon problem the value of c is large, $c \to \infty$, and thus the a_i degrees of freedom remain in the ground state [51].
In the case of the infinite plane we have to take the limit $L \to \infty$ at constant density (we will call it *thermodynamical limit*), so since $\frac{a_i}{L} \to 0$ the term depending on $\vec{a}$ in the covariant derivative drops off as long as a_i is bounded (we will see below that indeed a_i is bounded) but in the other term of the hamiltonian still a term in a_i survives.
Note that now the wavefunction ψ is a function of $\vec{a}$ besides $\vec{x}$; that is $\psi = \psi(\vec{x}, \vec{a})$. So we define the density $\rho(\vec{x})$ to be

$$\rho(\vec{x}) = \int d^2a\,|\psi(\vec{x}, \vec{a})|^2\ . \tag{A.9}$$

It is convenient to introduce a complex notation

$$A = \frac{1}{2}(A_1 - iA_2)\ . \tag{A.10}$$

Thus the "mean", the "fluctuating" and the "flat" part of the connection become respectively

$$A_M = -i\frac{\pi}{2\kappa}\rho_0\bar{z} \qquad \tilde{A} = \frac{1}{2}(\tilde{A}_1 - i\tilde{A}_2) \qquad a = \frac{1}{2\pi}(ia_1 + a_2)\ . \tag{A.11}$$

We start considering the mean-field case and therefore we suppose that $\tilde{A} = 0$. The hamiltonian is:

$$H = \int d^2z \int d^2a \left\{ \frac{2}{m} \left| \left(\bar{\partial} + \frac{\pi}{2\kappa}\rho_0 z \right) \psi \right|^2 + \frac{\pi}{m\kappa}\rho_0 |\psi|^2 + \frac{c}{\pi^2} \left| \left(\frac{\partial}{\partial a} + \frac{\pi\kappa}{2}\bar{a} \right) \psi \right|^2 \right\} . \tag{A.12}$$

The state of minimal energy corresponds to:

$$\psi = \psi_M = \exp\left(-\frac{\pi\rho_0}{2\kappa} z\bar{z} - \frac{\pi\kappa}{2} a\bar{a} \right) g(z, \bar{a}) \tag{A.13}$$

here g is an arbitrary function, holomorphic in z and antiholomorphic in a.
From (A.13) we can see that a is bounded, as we expected.
Let us look for the constant density solutions, which are known to correspond to the ground state of the full quantum mechanical mean-field problem. Choosing $g(z, \bar{a}) = e^{\pi\sqrt{\rho_0} z\bar{a}}\, \rho_0$ we get $\rho_M = \rho_0$, in fact

$$\rho_M = \int d^2a\, |\psi_M|^2 = \int d^2a \exp\left(-\pi\kappa \left| a - \frac{\sqrt{\rho_0}}{\kappa} z \right|^2 \right) \rho_0 = \rho_0 \tag{A.14}$$

provided we normalize the measure d^2a such that $\int d^2a e^{-\pi\kappa a\bar{a}} = 1$.
For the hamiltonian (A.12) we get

$$H_M = \frac{\pi}{m\kappa}\rho_0 N . \tag{A.15}$$

This is the energy of N particles in the lowest Landau level. We know that, if κ is integer, in the mean-field solution actually the N particles fill exactly κ levels corresponding to the energy [17]:

$$\mathcal{E}_M = \frac{1}{2m}|B_M| N\kappa = \frac{\pi\rho_0}{m} N . \tag{A.16}$$

So, in order to reproduce the correct mean-field energy, we must add

$$\mathcal{E}' = \frac{1}{2m}|B_M| N(\kappa - 1) = \frac{2\pi}{m}\left(1 - \frac{1}{\kappa}\right) \int d^2a \int d^2z |\psi|^4 . \tag{A.17}$$

So our correct starting hamiltonian is

$$H = \int d^2x \int d^2a \left\{ \frac{1}{2m}|\vec{D}\psi|^2 + \frac{c}{\pi^2} \left| \left(\frac{\partial}{\partial a} + \frac{\pi\kappa}{2}\bar{a} \right) \psi \right|^2 + \frac{2\pi}{m}\left(1 - \frac{1}{\kappa}\right) |\psi|^4 \right\} . \tag{A.18}$$

Notice that more in general a constant density is also obtained taking

$$\psi_M = \exp\left[-\frac{\pi\rho_0}{2\kappa} z\bar{z} - \frac{\pi\kappa}{2} a\bar{a} + \pi\sqrt{\rho_0} z\bar{a} + i(pz + \bar{p}\bar{z}) \right] \sqrt{\rho_0} . \tag{A.19}$$

then the hamiltonian (A.18) becomes

$$H_M = \int d^2z \left\{ \frac{2}{m}|ip|^2\rho_0 - \frac{\kappa}{2m}B_M\rho_0 \right\} = \frac{1}{2m}\left(p_x^2 + p_y^2\right)N + \frac{\kappa}{2m}|B_M|N \ , \tag{A.20}$$

so we have found, besides the standard mean-field energy (A.16), a kinetic energy equal to that of one particle times N. So our system moves like a condensate where all particles have the same momentum. In other words it represents a collective motion at constant density. If we compute the current

$$J = \frac{1}{2mi}\int d^2a \left[\psi^\dagger D\psi - \psi(D\psi)^\dagger\right] \tag{A.21}$$

we get

$$J = \frac{\rho_0}{m}p \ . \tag{A.22}$$

So we have found for the current exactly the charge density times the velocity. This is an exact solution of our effective lagrangian (3.3), as we saw in section 2.1, and in a sense it is gapless, since the difference with the ground state energy vanishes for vanishing momentum. It represents however the overall uniform motion of the system and cannot be considered as a local excitation.

Now let us introduce the fluctuations taking $\tilde{A} \neq 0$

$$\begin{aligned} H = \int d^2z \int d^2a \left\{ \frac{2}{m}\left|\left(\bar{\partial} + \frac{\pi}{2\kappa}\rho_0 z - i\bar{\tilde{A}}\right)\psi\right|^2 + \frac{\pi}{m\kappa}\rho|\psi|^2 + \right. \\ \left. + \frac{2\pi}{m}\left(1 - \frac{1}{\kappa}\right)|\psi|^4 + \frac{c}{\pi^2}\left|\left(\frac{\partial}{\partial a} + \frac{\pi\kappa}{2}\bar{a}\right)\psi\right|^2 \right\} \ . \end{aligned} \tag{A.23}$$

Then if we take

$$\psi = \exp\left(-\frac{\pi\rho_0}{2\kappa}z\bar{z} - \frac{\pi\kappa}{2}a\bar{a} + \pi\rho_0 z\bar{a}\right)\phi(z,\bar{z}) \tag{A.24}$$

for the density we get

$$\rho = \int d^2a\,|\psi|^2 = \int d^2a \exp\left(-\pi\kappa|a - \frac{\rho_0}{\kappa}z|^2\right)|\phi(z,\bar{z})|^2 = |\phi(z,\bar{z})|^2 \tag{A.25}$$

and for the hamiltonian

$$H = \int d^2x \left\{ \frac{1}{2m}\left|\left(\vec{\nabla} - i\bar{\tilde{A}}\right)\phi\right|^2 + \frac{\lambda}{2}|\phi|^4 \right\} \ , \tag{A.26}$$

where to reproduce the correct "mean-field" energy we have to take $\lambda = \frac{2\pi}{m}\left(1 - \frac{1}{\kappa}\right)$, and we have dropped the irrelevant additive constant term $\frac{\pi}{m\kappa}\rho_0 N$.

So we have found an hamiltonian which in the "mean-field" case gives the correct answer and in the more general "fluctuating" case recovers the covariant derivatives taking into account the density fluctuations.

We take equation (A.26) as the effective hamiltonian, describing our quantum fluid, corresponding to the effective lagrangian density (2.1).

REFERENCES

[1] J.G. BEDNORZ, K.A. MÜLLER *Z. Phys.* **64** (1986), 189.

[2] P.W. ANDERSON *Science* **235** (1987), 1196.

[3] R.B. LAUGHLIN *Science* **242** (1988), 525.

[4] T.V. RAMAKRISHNAN, C.N.R. RAO *Superconductivity Today* Wiley Eastern Limited (1992).

[5] F. WILCZEK *Phys. Rev. Lett.* **48** (1982), 1144.

[6] F. WILCZEK *Phys. Rev. Lett.* **49** (1982), 957.

[7] R.B. LAUGHLIN *Phys. Rev. Lett.* **60** (1988), 2677.

[8] A.L. FETTER, C.B. HANNA, R.B. LAUGHLIN, *Phys. Rev.* **B39** (1989), 9679.

[9] Y.H. CHEN, F. WILCZEK, E.WITTEN, B.I. HALPERIN, *Int. J. Mod. Phys.* **B3** (1989), 1001.

[10] B.I. HALPERIN, J. MARCH-RUSSELL, F. WILCZEK, *Phys. Rev.* **B40** (1989), 8726.

[11] T. MCMULLEN, P.IENA, S.N. KHANNA, *Int. J. Mod. Phys.* **B5** (1991), 1579.

[12] P. DONATIS, R. IENGO, *Nucl. Phys.* **B415** (1994) [FS], 630.

[13] P. DONATIS, R. IENGO, Persistent supercurrents in a planar non-relativistic chiral fluid S.I.S.S.A. 133/94/EP. Accepted for publication by Nucl. Phys. B [FS]

[14] P. DONATIS, R. IENGO, *Phys. Lett.* **B320** (1994), 64.

[15] P. DONATIS, R. IENGO, Magnetic screening properties of an incompressible chiral fluid, S.I.S.S.A. 50/94/EP, cond-mat 9409005. Accepted for publication by Nucl. Phys. B [FS]

[16] R. IENGO, K. LECHNER, *Nucl. Phys.* **B346** (1990), 551.

[17] *Fractional Statistics and Anyon Superconductivity*, edited by F. Wilczek, World Scientific, (1990).

[18] J. MARCH-RUSSELL, F. WILCZEK, *Phys. Rev. Lett.* **61** (1988), 2066.

[19] S.C. ZHANG, T.H. HANSSON, S. KIVELSON, *Phys. Rev. Lett.* **62** (1989), 82.

[20] D.H. LEE, S.C. ZHANG, *Phys. Rev. Lett.* **66** (1991), 1220.

[21] D.H. LEE, M.P.A. FISHER, *Int. J. Mod. Phys.* **B5** (1991), 2675.

[22] S.C. ZHANG, *Int. J. Mod. Phys.* **B6** (1992), 25.

[23] D. BOYANOVSKY, *Int. J. Mod. Phys.* **A7** (1992), 5917.

[24] H.B. NIELSEN, P. OLESEN, *Nucl. Phys.* **B61** (1973), 45.

[25] S.K. PAUL, A. KHARE, *Phys. Lett.* **B174** (1986), 420.

[26] J. HONG, Y. KIM, P.Y. PAC, *Phys. Rev. Lett.* **64** (1990), 2230.

[27] R. JACKIW, E.J. WEINBERG, *Phys. Rev. Lett.* **64** (1990), 2234.

[28] R. JACKIW, S.Y. PI, *Phys. Rev. Lett.* **64** (1990), 2969.

[29] R. JACKIW, K. LEE, E.J. WEINBERG, *Phys. Rev.* **D42** (1990), 3488.

[30] R. JACKIW, S.Y. PI, *Phys. Rev.* **D42** (1990), 3500.

[31] E.B. BOGOMOL'NYI, *Sov. J. Nucl. Phys.* **24** (1976), 449.

[32] H.J. VEGA, F.A. SCHAPOSNIK, *Phys. Rev.* **D14** (1976), 1100.

[33] H.J. VEGA, F.A. SCHAPOSNIK, *Phys. Rev. Lett.* **56** (1986), 2564.

[34] H.J. VEGA, F.A. SCHAPOSNIK, *Phys. Rev.* **D34** (1986), 3206.

[35] G. LOZANO, M.V. MANIES, F.A. SCHAPOSNIK, *Phys. Rev.* **D38** (1988), 601.

[36] P. NOZIÈRES, D. PINES *The theory of quantum fluids*, Vol. II, Addison-Wesley Publishing Corp. Redwood City, 1990.

[37] X.G. WEN, A. ZEE, *Phys. Rev.* **B41** (1990), 342.

[38] H. MORI, *Phys. Rev.* **B42** (1990), 184.

[39] L.N. BULAEVSKII, *Int. J. Mod. Phys.* **B4** (1990), 1849.

[40] J.R. CLEM, *Phys. Rev.* **B43** (1991), 7837.

[41] J.M. KOSTERLITZ, D. THOULESS, *J. Phys.* **C6** (1973), 1181.

[42] M.R. BEASLEY, J.E. MOOIJ, T.P. ORLANDO, *Phys. Rev. Lett.* **42** (1979), 1165.

[43] J.R. CLEM, M.W. COFFEY, *Phys. Rev.* **B42** (1990), 6209.

[44] J.R. CLEM, M.W. COFFEY, Z. HAO, *Phys. Rev.* **B44** (1991), 2732.

[45] L. BULAEVSKII, J.R. CLEM, *Phys. Rev.* **B44** (1991), 10234.

[46] J.R. CLEM, *Physica* **C 162-164** (1989), 1197.

[47] K.E. GRAY, R.T. KAMPWIRTH, D.E. FARRELL, *Phys. Rev.* **B** (1990), 819.

[48] W.E. LAWRENCE, S. DONIACH, *in* "Proceedings of the XII International Conference on Low Temperature Physics" (E. Kanda, Ed.), p.361, Academic Press, Tokio, 1971.

[49] X.G. WEN, A.ZEE, *Phys. Rev. Lett.* **62** (1989), 2873.

[50] R. IENGO, K. LECHNER, *Phys. Rep.* **213** (1992), 179.

[51] R. IENGO, K. LECHNER, *Nucl. Phys.* **B384** (1992), 541.

[52] R. IENGO, K. LECHNER, DINGPING LI, *Phys. Lett.* **B269** (1991), 109.

Acknowledgements

My hearty thanks go to Prof. Roberto Iengo, who in these years at Sissa guided my work, patiently trying to introduce me to this difficult interdisciplinary subject.
I also thank Dott. Michela Di Stasio for frequent and illuminating discussions, and for partially reading the manuscript.

Ringrazio inoltre Pucci per essere stato per me più di un amico in questi anni e per aver stimolato con il suo affetto e il suo cinismo tutto ciò che di buono ho fatto qui a Trieste.