Fractional Quantum Hall Effect on Compact Surfaces

Thesis Submitted for the Degree of
"Doctor Philosophiae"

Candidate:
Dingping Li

Supervisor:
Prof. Roberto Iengo

Academic Year 1992/93

Table of Contents

Table of Contents 1

3

1 Introduction 1

2 The basic fact about the QHE 6

2.1 The electron in magnetic field on a plane 6

2.1.1 Classical theory 6

2.1.2 Quantum theory, Landau levels, symmetric gauge 7

2.1.3 Landau gauge 9

2.1.4 Hall current 10

2.2 Integer QHE 10

2.2.1 Laughlin's explanation of the IQHE 11

2.2.2 The breakdown of translational invariance 14

2.2.3 The Hall conductance as a topological invariant 15

2.3 Fractional quantum Hall effect 21

2.3.1 Laughlin's wavefunction 21

2.3.2 The plasma analogy 23

2.3.3 Quasiparticles 24

2.3.4 Fractional charge and fractional statistics of quasiparticles 26

2.3.5 Generalized Laughlin argument for the FQHE 29

3 Hierarchical wave function in the FQHE **34**

3.1 Spin-polarized hierarchical theory 35

3.1.1 Halperin's hierarchical wave function 35

3.1.2 Quasiparticle's spin in the Laughlin state 40

3.2 Read's hierarchical wave function 45

3.3 Spin-singlet hierarchy 46

3.3.1 Spin-nonpolarized FQHE 47

3.3.2 Quasiparticle's spin in the non-polarized FQHE 49

3.3.3 Spin-singlet hierarchical wave function 52

3.3.4 Paring picture of the hierarchical wave function 57

3.4 Particle-hole conjugation in the FQHE 62

3.4.1 Spin-polarized case 62

3.4.2 Spin-nonpolarized case 63

4 Hierarchical wave function on the torus **65**

4.1 Laughlin's wave functions on the torus 65

4.2 Halperin's hierarchical wave function on the torus 70

4.2.1 An example 71

4.2.2 N-level hierarchical wave functions 74

4.2.3 Fractional statistics of the quasiparticles on the torus 76

4.2.4 Braid group analysis of the fractional statistics on the torus 80

4.2.5 Modular invariance and large gauge transformations of hierarchical wave functions 81

4.3 Read's hierarchy on the torus 83

5 FQHE on Riemann surfaces **90**

5.1 Motivation 90
5.2 Ground states on Riemann surfaces with the CθM metric 93
5.3 Landau levels on Riemann surfaces with the Poincaré metric 96
5.4 The wave functions of the Landau levels 101
5.5 The Laughlin wave function on Riemann surfaces 105
5.5.1 The Laughlin wave functions in the constant field on the surface with the Poincaré metric 105
5.5.2 The Laughlin wave functions in the constant field on the surface with the CθM metric 110
5.5.3 The degeneracy of the Laughlin state, a general discussion 111

6 Fractional statistics and spin in the FQHE **114**
6.1 Fractional statistics and fractional spin on Riemann surfaces 114
6.1.1 Braid group on Riemann surfaces 115
6.1.2 Quasiparticle's spin in the Laughlin state revisited 118
6.1.3 Quasiparticle's spin in the hierarchical state 119
6.2 The odd-denominator rule and fractional statistics 122

Bibliography **123**
Bibliography 123

Acknowledgements **131**

*

1 Introduction

Hall effect was discovered by E.H. Hall [44, 45] and the effect bears his name. Consider a two dimensional conducting material, we apply an electric field and a magnetic field Then it was found that there are a longitudinal current and a transverse current. The ratio of the transverse current to the electric field is called the Hall conductivity σ_H. The direct calculation yields

$$\sigma_H = nqc/B \tag{1.1}$$

where n is the density of the current carrier and q is the charge of the current carrier.

One century after the discovery of the Hall effect, von Klitzing found some surprising results when he was investigating the charge-transport properties of high mobility two-dimensional electron gases at low temperatures and high magnetic field, using samples provided by G. Dorda and M. Pepper. von Klitzing found that, for certain ranges of the magnetic field, the longitudinal resistance of the samples became very small. At the same values of the field, plot of the Hall conductance against B showed flat regions, or plateaux. It was found that σ_H is equal to ne^2/h where n is an integer with a very high precision ($\Delta n \leq 10^{-8}$). This effect can not be explained by the classical physics and should be a quantum effect. Thus the effect is called the quantum Hall effect. The most widely used experimental systems are a two-dimensional electrons in the metal-oxide-semiconductor (MOS) inversion layer and the electron systems in GaAs-Al$_x$Ga$_{1-x}$As ($0 < x \leq 1$).

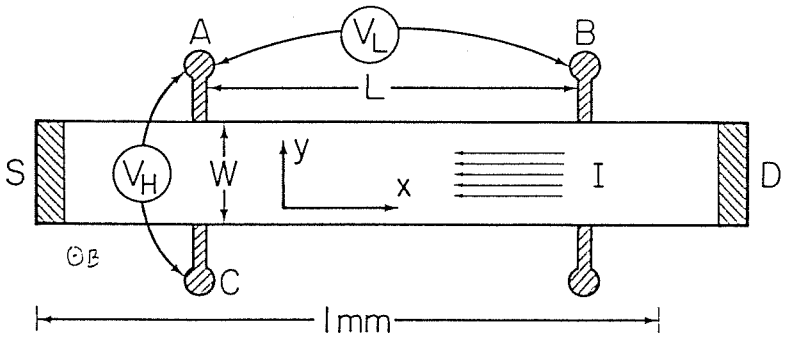

Figure 1.1: The Hall device.

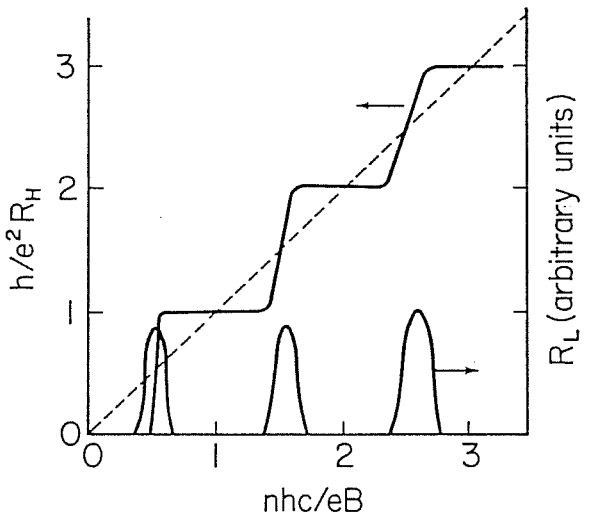

Figure 1.2: The integer quantum Hall effect observed in the experiment.

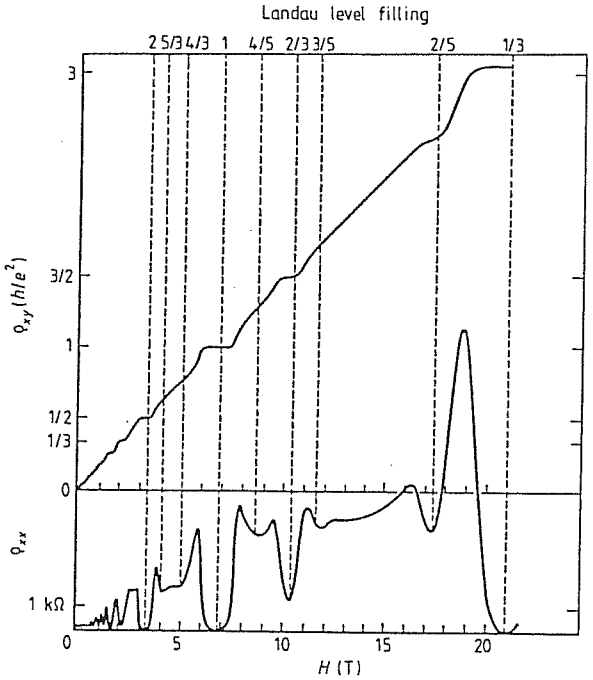

Figure 1.3: The fractional quantum Hall effect observed in the experiments.

For an integer number n of completely filled Landau levels,

$$\sigma_H = ne^2/h. \tag{1.2}$$

The vanishing diagonal resistance is due to the gaps in the single-particle density of the states, and the presence of the localized states in the energy gap is responsible for the width of the quantized Hall conductance plateau.

In 1982, D.C. Tsui, H.L. Stömer and A.C. Gossard presented another great surprise. They found that the value of n above could be fractional (with the accuracy $\Delta n \leq 10^{-5}$) in some ideal samples at very low temperature. Thus the fractional quantum Hall effect was discovered. The striking feature is that almost all fractional fillings appear with odd denominators. The integer QHE is essentially a one particle phenomenon. The situation is rather different for the FQHE. In the FQHE, the electron-electron interaction plays a significant role.

The most remarkable features are the appearance of integer or fractional quantum number,

the quantized Hall conductance, as a **measurable** quantity. The QHE is a new macroscopic quantum phenomenon. Not only can it be used to determine the fine-structure constant, the physics of the QHE is very rich and it has opened up a realm of novel physics. The QHE is undoubtedly one of the most remarkable findings of physics in modern times.

The QHE has exhibited a very interesting display between the Chern-Simons theory, fractional statistics and topology, all of which are under intense studies and are popular topics in theoretical physics recently. The subject of the QHE is deeply related to the fundamental physics, for example, Berry phase, and the topological theory (the Chern-Simons theory) which is under the frontier of investigations in the theoretical physics.

This thesis will be devoted to discuss the FQHE on compact Riemann surfaces. We will construct wave functions of the QHE on various surfaces, which include sphere, torus and surfaces of high genus. In particluar, We will emphasis the role of topology in the QHE. The thesis is based on Refs. [83, 80, 78, 79, 82, 81, 58].

The thesis is organized as follows. At first, in the second chapter we will give an elementary introduction to the QHE. We review the theories for the IQHE and FQHE. In particular, We emphasis the role of topology in the QHE and show that the Hall conductance is related to the topological invariant. It is also shown that the quasiparticles in the FQHE are anyons, which satisfy fractional statistics.

In chapter 3, we first review the standard hierarchical theory of the FQHE. We consider the FQHE on the sphere and use the projective coordinates on the sphere. The guiding principle for constructing the state of the FQHE on the sphere is the rotational invariance of the wave function.

Spin-nonpolarized FQHE will be also discussed in this chapter. When the magnetic field is not strong enough, the electron spin may not be polarized. Halperin had proposed a class of state with half spins reversed which are spin-singlet states. The hierarchical wave function for the spin-non-polarized case, for example, the spin-singlet FQHE, is not still fully understood. So it remains an interesting problem. We will construct the hierarchical wave function based

on the Halperin spin-singlet state.

We will also calculate the spin of the quasiparticle in the FQHE on the sphere. However, some questions remain unanswered. Is the spin of the quasiparticle topological-independent or not? This problem will be answered in chapter 6.

In chapter 4, the hierarchical wave function on the torus will be analyzed in details. We construct the wave function of the quasiparticles and discuss the fractional statistics on the torus. Modular invariance is also discussed. The degeneracy of the hierarchical state is obtained explicitly by constructing the wave function.

In chapter 5, we discuss the quantum mechanics and quantum Hall effect on Riemann surfaces. In particular, we construct the Laughlin wave function on Riemann surfaces of high genus. The degeneracy of the Laughlin states is obtained explicitly and our result about the degeneracy is different from the one in the literature.

In chapter 6, we will calculate the spin of the quasiparticle on Riemann surfaces by using the braid group on Riemann surfaces. We find that the spin of the quasiparticle is topological-independent.

2 The basic fact about the QHE

In this chapter, we give an introduction to the IQHE and FQHE.

2.1 The electron in magnetic field on a plane

In this section, We first review the classical theory of the Hall effect and then discuss the quantum mechanics of one electron in magnetic field on a plane.

2.1.1 Classical theory

Let $z = x + iy$ is the complex coordinate of the electron and $v = dz/dt$. The electric field is $E = E_x + E_y$ and the magnetic field B is perpendicular to the plane. The equation of the motion of the electron is

$$mdv/dt = -eE + ieBv/c \tag{2.1}$$

Suppose that E and B are constant, the solution of the above equation is

$$v = \frac{cE}{iB} + v_0 e^{i\omega vt} \tag{2.2}$$

where ω is equal to eB/mc. The Hall current of the electrons is then

$$j = -nev \tag{2.3}$$

where n is the density of the electrons. Introduce the conductivity matrix σ_{ij},

$$j_i = \sum_j \sigma_{ij} E_j, \tag{2.4}$$

where $i = 1, 2$ and j_1 (j_2) is the current along the axis x (y). From Eq. (2.3), we get

$$\sigma_{11} = \sigma_{22} = -nec/B, \sigma_{12} = \sigma_{21} = 0. \tag{2.5}$$

The relations $\sigma_{11} = \sigma_{22}$, $\sigma_{12} = \sigma_{21}$ can be derived by Onsager reciprocity relations and symmetry considerations. The resistance matrix ρ is the inverse of the matrix σ and in this case it is equal to,

$$\rho_{11} = \rho_{22} = 0, \rho_{12} = \rho_{21} = B/nce. \tag{2.6}$$

If consider the collisions between electrons, we use the Langevin equation,

$$md < v > /dt = -eE + ieB < v > /c - m < v > /\tau \tag{2.7}$$

where $< v >$ is the average velocity and τ is the relaxation time. The solution of the above equation gives the current density,

$$j = \frac{\sigma_0 E}{1 - i\omega\tau} \tag{2.8}$$

where $\sigma_0 = ne^2\tau/m$. Then one has

$$\sigma_{11} = \sigma_0/(1 + \omega^2\tau^2), \sigma_{12} = -\sigma_0\omega\tau/(1 + \omega^2\tau^2) \tag{2.9}$$

with $\sigma_{22} = \sigma_{11}$ and $\sigma_{21} = -\sigma_{12}$, and

$$\rho_{11} = 1/\sigma_0, \rho_{12} = \omega\tau/\sigma_0. \tag{2.10}$$

with $\rho_{22} = \rho_{11}$ and $\rho_{21} = -\rho_{12}$.

2.1.2 Quantum theory, Landau levels, symmetric gauge

The Hamiltonian of the electron on a plane in a constant magnetic field perpendicular to the plane is

$$H = \frac{1}{2m}[(p_x + eA_x/c)^2 + (p_y + eA_y/c)^2] \tag{2.11}$$

with $p_x = -i\hbar\partial_x$ and $p_y = -i\hbar\partial_y$. The vector potential of the magnetic field in symmetric gauge is

$$A_x = By/2, A_y = -Bx/2. \tag{2.12}$$

One can show that

$$\begin{aligned} H &= \frac{1}{2m}(p_x + eA_x/c - ip_y - ieA_y/c)(p_x + eA_x/c + ip_y + ieA_y/c) \\ &\quad -\frac{i}{2m}[p_x + eA_x/c,\ p_y + eA_y/c] \\ &= \frac{2}{m}(-i\hbar\partial_z + ieB\bar{z}/4c)(-i\hbar\partial_{\bar{z}} - ieBz/4c) \\ &\quad +\hbar eB/2mc \end{aligned} \tag{2.13}$$

where $\partial_z = (\partial_x - i\partial_y)/2$. Notice that

$$[(-i\hbar\partial_{\bar{z}} - ieBz/4c), (-i\hbar\partial_z + ieB\bar{z}/4c)] = \hbar eB/2c$$

Just the problem of solving the eigenvalues and eigenfunctions of the above Hamiltonian is the same as the problem of a harmonic oscillator. The ground states (or lowest Landau level) satisfy the following equation,

$$(-i\hbar\partial_{\bar{z}} - ieBz/4c)\Psi_0 = 0 \tag{2.14}$$

and the solutions are

$$\Psi_{k,0} = z^k e^{\frac{-z\bar{z}}{4l^2}}. \tag{2.15}$$

with $l = \sqrt{\frac{\hbar c}{eB}}$ and l is called as the magnetic length. The normalized wave functions are

$$\Psi^N_{k,0} = \frac{z^k e^{\frac{-z\bar{z}}{4l^2}}}{\sqrt{2^{k+1}m!\pi}} \tag{2.16}$$

To get the wavefunctions of high Landau levels, we apply the "creation" operator $A^+ = -i\hbar\partial_z + ieB\bar{z}/4c$ on the ground states. The wavefunctions of the nth Landau levels are

$$\Psi_{k,n} = (A^+)^n \Psi_{k,0} \tag{2.17}$$

with the eigenvalues of the Hamiltonian as

$$E_n = (n + \frac{1}{2})\hbar\omega \tag{2.18}$$

with $\omega = eB/mc$ defined in the last section, as the cyclotron frequency.

2.1.3 Landau gauge

The symmetric gauge is quite convenient for discussing the FQHE. But it is not a convenient gauge in the discussion of the IQHE. Another very useful gauge is the Landau gauge, widely used in the case of the IQHE, in which the vector potential is

$$A_x = 0, A_y = -Bx. \tag{2.19}$$

The Hamiltonian is now

$$H = \frac{1}{2m}[p_x^2 + (p_y - eBx/c)^2] \tag{2.20}$$

As p_y commutes with the Hamiltonian, the variables are separable. The eigenfunctions can be written as

$$\Psi = e^{ik_y y}\psi(x) \tag{2.21}$$

and the Hamiltonian becomes

$$H = \frac{1}{2m}[p_x^2 + (\hbar k_y - eBx/c)^2] \tag{2.22}$$

and it corresponds to a harmonic oscillator with equilibrium point at $x_0 = k_y l^2$ where l is the magnetic length defined before. The wave functions for the Landau levels can be obtained by using the same methods as the case of the symmetric gauge. We write the Hamiltonian now as

$$H = \frac{1}{2m}(p_x - i\hbar k_y + ieBx/c)(p_x + i\hbar k_y - ieBx/c) + \frac{1}{2m}[p_x,\ ieBx/c] \tag{2.23}$$

and the ground state is given by the solution of the following equation,

$$(p_x + i\hbar k_y - ieBx/c)\psi(x) = 0 \tag{2.24}$$

and the solution is (ignoring the normalization factor)

$$\psi(x) = e^{\frac{-(x-x_0)^2}{2l^2}} \tag{2.25}$$

with $x_0 = k_y l^2$ and the high Landau levels can be obtained by applying operator $p_x - i\hbar k_y + ieBx/c$ on the ground state. If we confine the system in a rectangular cell with sides L_1

and L_2, by using periodic boundary conditions along the y axis, then $k_y = 2\pi n/L_2$. But $x_0 = k_y l^2$ and $0 < x_0 < L_1$, thus we get the degeneracy of the ground states, which is equal to $L_1 L_2/2\pi l^2$ or $\frac{\Phi}{\Phi_0}$ with $\Phi_0 = hc/e$. So the degeneracy of each Landau level is the total flux threading the planar system in the units of the flux quantum Φ_0.

If the electron gas is non-interacting, then

$$\sigma_{12} = -nce/B = -(N/\frac{\Phi}{\Phi_0})\frac{e^2}{h} = -\frac{\nu e^2}{h} \tag{2.26}$$

where $\Phi = BL_1L_2$ is the flux out of the surface and ν is the filling factor, the ratio of the electron number to the degeneracy of the Landau level.

2.1.4 Hall current

If there is a constant electric field E in the x-direction, the Hamiltonian in the Landau gauge will be

$$\begin{aligned} H(E) &= \frac{1}{2m}[p_x^2 + (\hbar k_y - eBx/c)^2] + eEx \\ &= \frac{1}{2m}[p_x^2 + (\frac{eB}{c})^2(x - \tilde{x}_0)^2] + eEx_0 - \frac{mc^2E^2}{2B}. \end{aligned} \tag{2.27}$$

where $\tilde{x}_0 = x_0 - eE/m\omega^2$. If $\phi_n(x - x_0)$ is the eigenfunction of the nth Landau level when $E = 0$, $\phi_n(x - \tilde{x}_0)$ is the eigenfunction of the nth Landau level of the above Hamiltonian. For those eigenfunctions, we have

$$\begin{aligned} < v_x > &= \frac{< p_x >}{m} = 0 \\ < v_y > &= \frac{< p_y - eBx/c >}{m} = \frac{\hbar k_y}{m} - \frac{eB}{mc}\tilde{x}_0 = cE/B, \end{aligned} \tag{2.28}$$

then current is then

$$j_x = -ne < v_x >= 0,\ j_y = -ne < v_y >= -\nu\frac{e^2}{h}E.$$

2.2 Integer QHE

The plateau observed by von Klitzing are a remarkable phenomenon. We have shown that the classical theory can not account for the QHE. However, the standard quantum transport theories can not also explain the QHE (for example, Ref. [4]) and a new approach is needed.

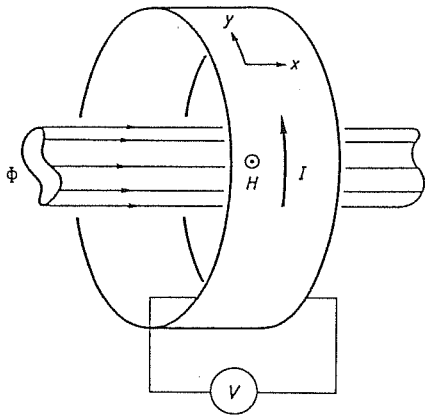

Figure 2.1: The sample geometry considered in Laughlin's thought experiment.

2.2.1 Laughlin's explanation of the IQHE

R. Laughlin made his first important contribution to the QHE in Ref. [68], which gives an important impact on later developments on the IQHE, and actually also on the FQHE.

The Laughlin's argument is as follows. The QHE is basically a bulk effect, that is, the changes in size, shape, connectivity etc. of samples do not lead to any changes in the result of the QHE. Thus, we can choose a convenient geometry (so called *gedanken* experiment) and draw general conclusions.

We consider a cylindrical system, pieced everywhere by a magnetic field normal to its surface. In the presence of disorder, the Landau levels are broadened into bands of extended states separated by localized ones. We consider the case that the Fermi level is in a mobility gap where the localized states occupy. We also assume that the state of the IQHE is non-degenerated. We add a magnetic flux-tube through the loop of the cylinder. We turn on the flux adiabaticlly from 0 to Φ_0 (Φ_0 is the fundamental unit of the flux). However, by the gauge invariance, a unit flux Φ_0 is equivalent to no flux at all. The Hamiltonian at zero

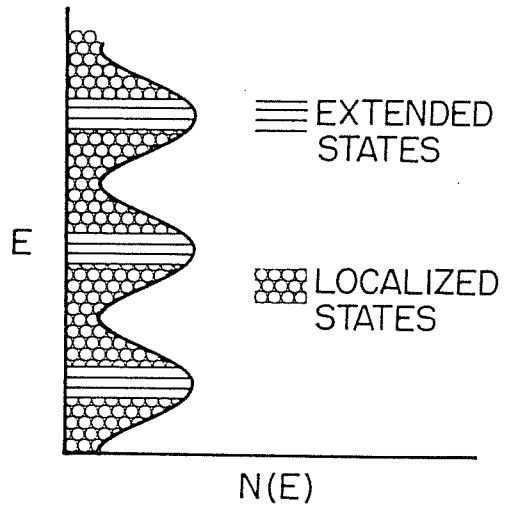

Figure 2.2: The existence of localized states

flux tube and the Hamiltonian at a unit flux Φ_0 tube are gauge equivalent by the gauge transformation $e^{ie\delta A_y y/\hbar c}$ with $\delta A_y = \delta\phi/L_2 = \phi_0/L_2$. Therefore adiabaticlly adding a unit-flux tube, the state will map to original one and only results in excitation or deexcitation of the original system. If there exists a gap in the system, the adiabatic change of the many-body Hamiltonian can not excite quasiparticle across this gap, it can only produce an excitation of charge transfer.

Let us consider the non-interacting case. We use the Landau gauge. The Hamiltonian in the presence of the flux-tube is

$$H(\delta\phi) = \frac{1}{2m}[p_x^2 + (p_y - eBx/c + e\delta A_y/c)^2] + eEx \tag{2.29}$$

One can show that

$$H(\delta\phi) = U^{-1}H(0)U$$

with $U(y) = e^{ie\delta A_y y/\hbar c} = e^{2\pi i\delta\phi y/L_2\Phi_0}$. Only when $\delta\phi$ is an integer times Φ_0, $U(y)$ is a well defined function on the coordinate y (remember that y is defined in a circle) and in this case, $H(\delta\phi)$ and $H(0)$ are gauge equivalent. Now the eigenfunctions of the Hamiltonian of

Eq. (2.29) are $\Psi(\delta\phi) = e^{ik_y y}\psi_n(x, \tilde{x}_0 + \delta\tilde{x}_0)$ with $\delta\tilde{x}_0 = \delta A_y/B = \delta\phi/L_2 B = L_1/(\Phi/\delta\phi)$. If $\delta\phi = \Phi_0$, δx_0 is equal to the site spacing (L_1 divided by the degeneracy of Landau levels). Therefore, one electron is transferred from one edge to the other for each fully occupied Landau level when we turn on the flux adiabaticlly from 0 to Φ_0. If there are ν (an integer) Landau levels occupied, there will be $T = \nu$ electrons transferred from one edge to the other. The current around the loop is given by [18]

$$I = c\frac{\partial U}{\partial \delta\phi} \tag{2.30}$$

where U is the total electronic energy of the system. The energy change for such turning of the flux is

$$\Delta U = TeE_x L_1 = \nu e E_x L_1 = NeV_x. \tag{2.31}$$

The Eq. (2.30) may be conveniently evaluated via the substitution

$$\frac{\partial U}{\partial \delta\phi} \rightarrow \frac{\Delta U}{\Delta \delta\phi}. \tag{2.32}$$

The current is thus

$$I = c\frac{TeV_x}{\Phi_0} = \frac{\nu e^2 V_x}{h}, \tag{2.33}$$

and the Hall conductance is then

$$\sigma = \frac{\nu e^2}{h}, \tag{2.34}$$

In the case of the dirty system, the number of the electrons transferred T may not be equal to ν and it can be zero. For example, if all states are localized, the effect of the flux of the tube is only to multiply each wave function by $U(y)$, and this gauge transformation only changes the phase of the wave function, does not change any physical quantities. In this case, the energy change and current are zero. For no zero currents, there must exist extended states.

For the extended states, due to $\Psi(y, \delta\phi) = U(y)\Psi(y, 0)$, the original periodic boundary condition around the loop is changed to

$$\Psi(y + L_2, \delta\phi) = e^{2\pi i \delta\phi/\Phi_0}\Psi(y, \delta\phi). \tag{2.35}$$

This is a drastically different boundary condition, since the wave function has to acquire an extra phase when rotated along the loop. The adiabaticlly adding a unit-flux tube can result an excitation of charge transfer due to extended states.

Thus for the dirty system, if there are no extended states at the Fermi level (or the Fermi level lies in a gap in the extended-state spectrum), the Laughlin's argument still can be applied and the current is given by $I = c\frac{Tel'_x}{\Phi_0}$ with some integer T. We will show that T is equal to the filling factor in the next subsection.

In conclusion, we have shown that the IQHE occurs whenever the fermi level lies in a localized band and there exist extended states below the fermi level (Halperin had clarified some details of the Laughlin's argument in Ref. [46] and considered the effect of the edge states).

The condition for the occurring of the IQHE can also be obtained by Kubo formula, see Ref. [4] and references therein, and also Ref. [99]. By using Kubo formula directly, one can show that, if the fermi level lies in a localized region of energy between Landau levels, the longitudinal resistance is zero and the Hall conductance is quantized.

2.2.2 The breakdown of translational invariance

The breakdown of the translational invariance is essential to the observed QHE (for example, see Refs. [90, 91]).

If the system is translationally invariant, we can show that $\mathbf{j} = -ne\mathbf{v}$ no matter what the value of n. In a frame of reference moving with velocity $\mathbf{v} = c\mathbf{E} \times \mathbf{B}/B^2$, the electric field vanishes in the moving frame and the current vanishes in this frame. Thus the current density in the static frame is then always given by $\mathbf{j} = -ne\mathbf{v}$ where n is the density of the electrons. $\mathbf{j} = -ne\mathbf{v}$ holds for every filling without occurrence of plateaux. The argument used above depends only on the translational invariance of the system. But we know that this is not true in the QHE. There must be no translational invariance in the QHE system. This happens automatically because real material samples have some degree of imperfection.

In the presence of a random potential and in the absence of a magnetic field, the electron states in a two-dimension system are always localized. If there is a magnetic field, there exist extended states. Ando et al. had studied theoretically the Hall effect in the presence of impurities and Kawaji et al. had done the experiment [2, 62]. They found that when the Fermi level moved through the region (by changing the magnetic field or the density of the electrons) of the localized states which is in the states between the Landau levels, the Hall resistance remained constant. However, the precise quantization of the Hall resistance in units of e^2/h was discovered until February of 1980 by von Klitzing.

R.E. Prange had also shown that an isolated δ-function impurity does not affect the Hall conductivity [90]. More complicate situations (for example, in the case of several δ-function impurities and other kinds of imperfections, see Ref. [91]) had also been studied. it was found that, in the presence of some kinds of impurities, the localized states exists which carry no current. The remaining extended states carry *extra* Hall current which exactly compensates for that not carried by the localized states. Thus if all extended states of the appropriate Landau level are filled, or the Fermi level is in a mobility gap where the localized states occupy, the total Hall current carried by the level is precisely the same as in the absence of the impurities and the localized states.

2.2.3 The Hall conductance as a topological invariant

The high precision of the observed quantization of the Hall conductance suggests that it may have some topological origin. Laughlin's argument is actually based on the gauge invariance and a non-trivial geometry. Laughlin's argument has been then refined, elaborated and further developed by the so called topological approach.

Thouless et al. first proposed the topological approach for the non-interacting case with a periodic potential [105]. In Ref. [105], the Hall conductance was calculated by the Kubo formula and it can be rewritten into an integral which shows quantization explicitly. Refs. [9, 67] recognized it as the first Chern class of $U(1)$ principal fiber bundle on the torus,

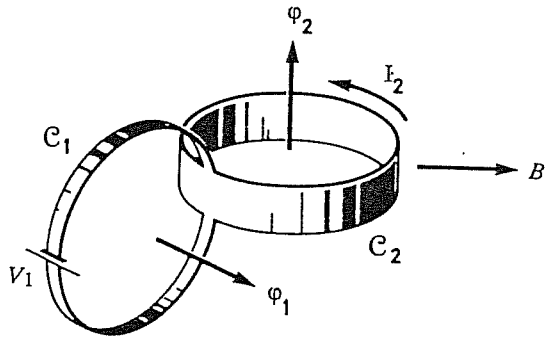

Figure 2.3: The Hall setting including connecting wires and battery. The latter is replaced by a time dependent magnetic flux.

where the fibers are the magnetic Block waves and the torus corresponds to the magnetic Brillouin zone. It was then generalized, for example in Refs. [87, 10] to the case allowing electron-electron interactions, weak impurities and imperfections.

We will follow closely the presentation of Ref. [10] (see also Ref. [60]). In this section, we take units e, $\hbar$ and c as one for simplicity.

Following the Laughlin's argument, we add a magnetic flux-tube ϕ_2 through the loop of the cylinder. But we also add another magnetic flux-tube ϕ_1 threading the loop of a wire which connects two edges. The Hamiltonian of the many-body electron system includes the external strong magnetic field, the electron-electron interaction and interactions with impurities. The Laughlin's condition for the QHE, the Fermi level lies in the region of the localized states is not an appropriate condition for the many-body Hamiltonian and will be replaced by the condition of the nondegeneracy of the many-body ground states.

The Hamiltonian is

$$H(\phi_1, \phi_2) = \sum_i \frac{1}{2m}(\mathbf{P}(x_i) + \mathbf{A}(x_i))^2 + V(x_1, x_2, \cdots, x_N). \tag{2.36}$$

$\mathbf{A} = \mathbf{A}_0 + \phi_1\mathbf{A}_1 + \phi_2\mathbf{A}_2$ and $\mathbf{A}_0$ is the gauge potential of the external strong magnetic field, $\phi_1\mathbf{A}_1$ and $\phi_2\mathbf{A}_2$ are the gauge potentials corresponding to two flux-tubes. We choose

$$\int_{C_a} d\mathbf{x} \cdot \mathbf{A}_b = \delta_{ab}, a, b = 1, 2, \tag{2.37}$$

therefore ϕ_a is the flux out of the loops.

The flux ϕ_1 is switched on adiabaticlly, and the electromotive force induced in the wire is

$$\frac{d\phi_1}{dt} = -V_1 \tag{2.38}$$

Let V_1 be very small and constant, then $\phi_1 = -tV_1$. When the wave function is $|\phi>$, one can show that

$$\begin{aligned} I_2 &= \frac{\partial E(\phi_1, \phi_2)}{\partial \phi_2} \\ &= \partial_{\phi_2} < \phi|H|\phi > \\ &= E(\phi_1, \phi_2)(< \partial_{\phi_2}\phi|\phi > + < \phi|\partial_{\phi_2}\phi >) + < \phi|\partial_{\phi_2}H|\phi > \\ &= E(\phi_1, \phi_2)\partial_{\phi_2} < \phi|\phi > + < \phi|\partial_{\phi_2}H|\phi > \\ &= < \phi|\partial_{\phi_2}H|\phi > . \end{aligned} \tag{2.39}$$

We can write the Schrödinger equation as

$$-iV_1\partial_{\phi_1}|\phi >= H(\phi_1, \phi_2)|\phi > . \tag{2.40}$$

Differentiating the above equation with respect to ϕ_2, one obtains

$$-iV_1 < \phi|\partial_{\phi_1}\partial_{\phi_2}|\phi >= I_2 + iV_1 < \partial_{\phi_1}\phi|\partial_{\phi_2}\phi > . \tag{2.41}$$

From this equation and $I_2 = \sigma V_1$, one find that the Hall conductance

$$\sigma = -i(\partial_{\phi_2} < \phi|\partial_{\phi_1}|\phi > + < \partial_{\phi_1}\phi|\partial_{\phi_2}\phi > - < \partial_{\phi_2}\phi|\partial_{\phi_1}\phi >). \tag{2.42}$$

Because the flux quantum Φ_0 is very small physical quantities and the above formula should be essentially unchanged in the regions $0 < \phi_1 < \Phi_0$ and $0 < \phi_2 < \Phi_0$. We can replace the above formula by an average over each flux in an interval $[0, \Phi_0]$,

$$\begin{aligned}\sigma &= -\frac{i}{\Phi_0^2}\int_0^{\Phi_0}\int_0^{\Phi_0} d\phi_1 d\phi_2(\partial_{\phi_2} < \phi|\partial_{\phi_1}|\phi > + \\ &< \partial_{\phi_1}\phi|\partial_{\phi_2}\phi > - < \partial_{\phi_2}\phi|\partial_{\phi_1}\phi >) \\ &= -\frac{i}{\Phi_0^2}\int_0^{\Phi_0}\int_0^{\Phi_0} d\phi_1 d\phi_2(< \partial_{\phi_1}\phi|\partial_{\phi_2}\phi > - < \partial_{\phi_2}\phi|\partial_{\phi_1}\phi >). \end{aligned} \tag{2.43}$$

In the above equation, we have used the adiabatic approximation,

$$\begin{aligned}\partial_{\phi_2} < \phi|\partial_{\phi_1}|\phi > &= (i/V_1)\partial_{\phi_2} < \phi|H|\phi > \\ &\approx (i/V_1)\partial_{\phi_2} E(\phi_1, \phi_2) \end{aligned} \tag{2.44}$$

where $E(\phi_1, \phi_2)$ is the energy of the ground state of the Hamiltonian $H(\phi_1, \phi_2)$. $|\Omega(\phi_1, \phi_2) >$ is the ground state of the Hamiltonian $H(\phi_1, \phi_2)$,

$$H(\phi_1, \phi_2)|\Omega(\phi_1, \phi_2) >= E(\phi_1, \phi_2)|\Omega(\phi_1, \phi_2) > \tag{2.45}$$

We can choose $|\Omega(\phi_1, \phi_2) >$ as the normalized wave function and being smooth in ϕ_1, ϕ_2 by the assumption of nondegeneracy.

Suppose that the system at time $t = 0$ is in the normalized nondegenerated ground state $|\phi(t = 0, \phi_2) >= |\Omega(\phi_1 = 0, \phi_2) >$. In the limit $V_1 \to 0$, $|\phi >$ evolves adiabaticlly in the ϕ_1 variable according to the Schrödinger equation.

According to Refs. [12, 97],

$$|\phi(\phi_1, \phi_2) >= e^{[(i/V_1)\int_0^{\phi_1} d\phi_1' E(\phi_1', \phi_2)]} e^{i\gamma(\phi_1, \phi_2)}|\Omega(\phi_1, \phi_2) > \tag{2.46}$$

where $\gamma(\phi_1, \phi_2)$ is the so called Berry's phase [12],

$$\frac{d\gamma(\phi_1, \phi_2)}{d\phi_1} = i < \Omega(\phi_1, \phi_2)|\partial_{\phi_1}\Omega(\phi_1, \phi_2) > \tag{2.47}$$

By the Stokes theorem, Eq. (2.43) can be written as

$$\sigma = -\frac{i}{\Phi_0^2}\int_0^{\Phi_0} d\phi_2(< \phi|\partial_{\phi_2}\phi > (\phi_1 = 2\pi) - < \phi|\partial_{\phi_2}\phi > (\phi_1 = 2\pi)). \tag{2.48}$$

Inserting Eq. (2.46) to Eq. (2.48) and using the periodicity of the ground state energy,

$$\sigma = -\frac{i}{\Phi_0^2}\int_0^{\Phi_0} d\phi_2 (i\partial_{\phi_2}\gamma|^{2\pi}\phi_1 = 0+ < \Omega|\partial_{\phi_2}\Omega > |^{2\pi}\phi_1 = 0). \tag{2.49}$$

One has

$$\begin{aligned} & \int_0^{\Phi_0} d\phi_2 i\partial_{\phi_2}\gamma|^{2\pi}\phi_1 = 0 \\ = \; & i(\gamma(2\pi,2\pi) - \gamma(2\pi,0) - \gamma(0,2\pi) + \gamma(0,0)) \\ = \; & i(\gamma(2\pi,2\pi) - \gamma(2\pi,0)) \end{aligned} \tag{2.50}$$

due to $\gamma(0,\phi_2) = 0$. On the other hand, due to Eq. (2.47), we have

$$\begin{aligned} & \int_0^{\Phi_0} d\phi_1 i < \Omega(\phi_1,\phi_2)|\partial_{\phi_1}\Omega(\phi_1,\phi_2) > |^{2\pi}\phi_2 = 0 \\ = \; & \int_0^{\Phi_0} d\phi_1 \partial_{\phi_1}\gamma|^{2\pi}\phi_2 = 0 \\ = \; & \gamma(2\pi,2\pi) - \gamma(0,2\pi) - \gamma(2\pi,0) - \gamma(0,0) \\ = \; & \gamma(2\pi,2\pi) - \gamma(2\pi,0) \end{aligned} \tag{2.51}$$

Finally, we obtain that

$$\begin{aligned} \sigma \; = \; & \frac{i}{\Phi_0^2}\Big(\int_0^{\Phi_0} d\phi_1 < \Omega|\partial_{\phi_1}\Omega > |^{2\pi}\phi_2 = 0 \\ & - \int_0^{\Phi_0} d\phi_2 < \Omega|\partial_{\phi_2}\Omega > |^{2\pi}\phi_1 = 0 \\ = \; & \frac{i}{\Phi_0^2}\int_{\partial T} < \Omega|d\Omega > \\ = \; & \frac{i}{\Phi_0^2}\int_T < d\Omega|d\Omega > \end{aligned} \tag{2.52}$$

where ∂T is the boundary of the square of length 2π, and we have used the relation $d < \Omega|d\Omega >=< d\Omega|d\Omega >$. One can show that

$$< d\Omega|d\Omega >= Tr(dPPdP) \tag{2.53}$$

where $P = |\Omega >< \Omega|$. We can make a singular gauge transformation

$$F = e^{-i(\phi_1\theta_1 + \phi_2\theta_2)} \tag{2.54}$$

with $\partial\theta_i = \mathbf{A}_i$ where ∂ is the derivative of the coordinates of the surface. As one winds around T_i, θ_i increases a unity. Under this gauge transformation,

$$\begin{aligned}\tilde{H} &= F^{-1}H(\phi_1,\phi_2)F \\ &= \sum_i \frac{1}{2m}(\mathbf{P}(x_i)+\mathbf{A}_0(x_i))^2 + V(x_1,x_2,\cdots,x_N) \end{aligned} \tag{2.55}$$

and $\tilde{H}$ is ϕ_i independent. The wave function in this gauge is $|\tilde{\phi}>= F^{-1}|\phi>$, and $|\tilde{\phi}>$ satisfies a boundary condition: when the coordinates move around the loops, the wave function gets a phase $e^{i\phi_{1,2}}$. Due to

$$\begin{aligned}&< d\Omega|d\Omega > \\ &=< d\tilde{\Omega}|d\tilde{\Omega} > -d\ln F < \tilde{\Omega}|d\tilde{\Omega} > + < d\tilde{\Omega}|\Omega > d\ln F \\ &=< d\tilde{\Omega}|d\tilde{\Omega} > + dTr(\tilde{P}d\ln F). \end{aligned} \tag{2.56}$$

$\tilde{P}$ and $d\ln F$ are both continuous in ϕ_i, the integration of $dTr(\tilde{P}d\ln F)$ is zero. We get another formula for the conductance

$$\begin{aligned}\sigma &= \frac{i}{\Phi_0^2}\int_T d\phi_1 d\phi_2 < d\tilde{\Omega}|d\tilde{\Omega} > \\ &= \frac{i}{\Phi_0^2}\int_T d\phi_1 d\phi_2 Tr(d\tilde{P}\tilde{P}d\tilde{P}). \end{aligned} \tag{2.57}$$

In units $e = \hbar = c = 1$, $\Phi_0 = 2\pi$. Now we give an argument showing that $\sigma = n/2\pi$ where n is an integer. Ref. [10] gave a simple argument for the quantization of the Hall conductance. It is as follows. $|\tilde{\Omega}(\phi_1,\phi_2)>$ is the ground state in the new gauge. Suppose we change ϕ_1,ϕ_2 adiabaticlly around one loop C in the parameter space ϕ_1,ϕ_2. We will get a Berry's phase, γ_C, given by

$$\gamma_C = i\int_C < \tilde{\Omega}|d\tilde{\Omega} >= i\int_S Tr(d\tilde{P}\tilde{P}d\tilde{P}) \tag{2.58}$$

where S is the surface enclosed by C. In a close manifold without a boundary, in our case, a torus, we have two S, S_1 and S_2. Then we have

$$\gamma_C = i\int_{S_1} Tr(d\tilde{P}\tilde{P}d\tilde{P}) = i\int_{S_2} Tr(d\tilde{P}\tilde{P}d\tilde{P}). \tag{2.59}$$

In order to have a well defined phase, $e^{i\gamma}$, one should have

$$i\int_{S_1-S_2} Tr(d\tilde{P}\tilde{P}d\tilde{P}) = i\int_T Tr(d\tilde{P}\tilde{P}d\tilde{P}) \tag{2.60}$$

to be 2π times an integer. Thus we proved the quantization of the Hall conductance, $\sigma = 1/2\pi(integer)$ (in units e, $\hbar$ and c equal to one).

The above argument can be extended to the case of the FQHE [104] and we will discuss it later.

2.3 Fractional quantum Hall effect

The quantization of the Hall conductance of the IQHE can be understood by the existence of the gap in the single-particle state and the presence of the localized states in the gap. The FQHE can be only observed in a sample with very low amounts of disorder, at low temperatures, and in very high magnetic field. The noninteracting picture is inadequate in explaining the FQHE. The electron-electron interaction plays an important role in the FQHE.

The present picture of the FQHE is due to Laughlin and quite convincing. There is no good alternate to Laughlin's imcompressible liquid picture. In analogy with the IQHE, the correct theory of the FQHE should have a gap in the excitation spectrum at fractional filling in order to have a vanishing longitudinal resistance and small change in the magnetic field will not change the conductivity in order to have the plateau. Laughlin theory satisfies all those requirements.

2.3.1 Laughlin's wavefunction

The Hamiltonian for the electrons with the coulombic form of the electron-electron interactions moving in a plane and subjected to a magnetic field perpendicular to the plane

$$\begin{aligned} H(\phi_1,\phi_2) &= H_0 + V(x_i) + \sum_{i<j}\frac{e^2}{r(\mathbf{x}_i-\mathbf{x}_j)}, \\ &= \sum_i [\frac{1}{2m}(\mathbf{P}(x_i)+e\mathbf{A}(x_i)/c)^2 + V(x_i)] + \sum_{i<j}\frac{e^2}{r(\mathbf{x}_i-\mathbf{x}_j)}, \end{aligned} \tag{2.61}$$

where V is the potential of a uniform neutralizing background.

Suppose the electrons are all spin-polarized by the Zeeman interaction and the cyclotron energy is much greater than the characteristic coulomb energy, i.e., $\hbar\omega \gg e^2/l$ (l is the magnetic length), we can take the approximation that every electron is in the state of the lowest Landau level (LLL).

We use the symmetric gauge to describe the magnetic field and the states in the LLL are given by Eq. (2.16). We rewrite Eq. (2.16) as

$$\psi_k = \frac{1}{\sqrt{2^{k+1}k!\pi}} z^k e^{\frac{-z\bar{z}}{4}}. \tag{2.62}$$

in the unit of the magnetic length $l = 1$ for simplicity. The approximate variational wave function for the FQHE at filling $\nu = 1/m$ proposed by Laughlin is

$$|m> = \Psi_m = \prod_{i<j}(z_i - z_j)^m e^{-\frac{1}{4}\sum_l |z_l|^2}. \tag{2.63}$$

The characteristics of the Laughlin wave function are:

a. The wave function is comprised solely of single-body wave functions lying in the LLL.

b. The wave function is antisymmetric.

c. The wave function is the eigenstate of total angular momentum.

It has been shown that the overlap of the Laughlin wave function with the exact wave function (of small number electrons), calculated numerically using three different inter-electronic repulsive potentials, $1/r$, $-\ln(r)$, $e^{-r^2/2}$, is near to one.

The appealing feature of the Laughlin wavefunction is that it is very efficient in keeping electrons apart and thus lowering the interaction energy. The wavefunction vanishes as $(z_i - z_j)^m$ as the ith and jth electrons approach each other. The wavefunction is the exact ground state in the limit that the electron-electron repulsions become infinitely short-ranged. The Hamiltonian which has the Laughlin state as its exact ground state is [38, 107]

$$H_m = H_0 + \sum_{i<j} V_m(\mathbf{r}_{ij}) \tag{2.64}$$

with

$$V_m(\mathbf{r}) = V_0 \nabla^{2(m-1)} \delta(\mathbf{r}). \tag{2.65}$$

2.3.2 The plasma analogy

The absolute value of the Laughlin state Ψ_m is

$$|\Psi_m|^2 = e^{-\beta S} \tag{2.66}$$

with

$$S = -\sum_{i<j} 2m^2 \ln|z_i - z_j| + \frac{1}{2}m\sum_k |z_k|^2. \tag{2.67}$$

$|\Psi_m|^2$ is interpreted as a probability for a canonical ensemble with a potential energy S and $\beta = 1/m$ as the inverse temperature. S is actually the potential energy of a one-component plasma in two dimensions. Particles of "charge" m interact with each other via the natural "coulomb" interaction $-\ln|z_i - z_j|$ in two dimension. And also there is a neutralizing background of "charge" density $(2\pi)^{-1}$, as

$$\nabla^2[\frac{1}{2}|z|^2] = 4\pi \times (2\pi)^{-1} \tag{2.68}$$

The plasma must be electrically neutral. Because the "particles" carry "charge" m, the density of the "particles" should be $1/m$ of $(2\pi)^{-1}$. Remember that we take the magnetic length l to be one. If we keep the magnetic length l in the formula, we get the electron density

$$\rho = \frac{1}{2m\pi l^2} = \frac{eB}{mhc} = N/area \tag{2.69}$$

The filling is equal to the number of the electrons divided by the degeneracy of the Landau level. We use the fact that the degeneracy of the Landau level is equal to the flux quanta in the unit of Φ_0, we find the filling equal to

$$\nu = \frac{1}{m}. \tag{2.70}$$

Thus the Laughlin wavefunction Ψ_m has a filling equal to $1/m$. When $m < 70$, the temperature of the plasma is high enough and the state is a liquid. Thus all observed quantum Hall states, for example, 1/3, 1/5 etc are liquid states, or so called quantum liquid states.

2.3.3 Quasiparticles

The fractional charged quasiparticles can be generated by following a thought experiment [69]: Imagine piecing the ground state at location z_0 with an infinitely thin magnetic solenoid and adiabaticlly inserting through this solenoid a flux quantum Φ_0. As the flux is added, the wave function evolves adiabaticlly so as to always be an eigenstate of the changing Hamiltonian. When a full flux quantum has been added, the Hamiltonian is equal to the original one up to a gauge transformation, as the solenoid threaded by Φ_0 can be gauged away. The final state is an excited state of the original Hamiltonian. Such excitations are called quasiparticles.

The single-body wave functions responds under the thought experiment by adiabaticlly inserting a flux quantum at $z = 0$ in the manner,

$$\frac{z^k e^{\frac{-z\bar{z}}{4}}}{\sqrt{2^{k+1}k!\pi}} \rightarrow \frac{z^{k+1} e^{\frac{-z\bar{z}}{4}}}{\sqrt{2^{k+2}(k+1)!\pi}} \tag{2.71}$$

or

$$\begin{aligned} \frac{z^k e^{\frac{-z\bar{z}}{4}}}{\sqrt{2^{k+1}k!\pi}} &\rightarrow \frac{z^{k-1} e^{\frac{-z\bar{z}}{4}}}{\sqrt{2^k(k-1)!\pi}}, k > 0 \\ \frac{e^{\frac{-z\bar{z}}{4}}}{\sqrt{2\pi}} &\rightarrow \frac{\bar{z} e^{\frac{-z\bar{z}}{4}}}{\sqrt{4\pi}}. \end{aligned} \tag{2.72}$$

The state Ψ_m can be written

$$\Psi_m(z_1, \cdots, z_N) = \sum_{k_1 \cdots k_N} a_{k_1 \cdots k_N} z_1^{k_1} \cdots z_N^{k_N} e^{-\frac{1}{4}\sum_l^N |z_l|^2} \tag{2.73}$$

Ψ_m responds under the thought experiment by adiabaticlly inserting a flux quantum at $z = 0$ which creates a quasihole in the way

$$\Psi_m(z_1, \cdots, z_N) \rightarrow \sum_{k_1 \cdots k_N} \frac{a_{k_1 \cdots k_N}}{\sqrt{2^N(k_1+1)\cdots(k_N+1)}} z_1^{k_1+1} \cdots z_N^{k_N+1} e^{-\frac{1}{4}\sum_l^N |z_l|^2}. \tag{2.74}$$

However the normalization factors in the above equation make computation difficult. Laughlin suggested that the normalization factors can be removed,

$$\Psi_m(z_1, \cdots, z_N) \rightarrow \sum_{k_1 \cdots k_N} a_{k_1 \cdots k_N} z_1^{k_1+1} \cdots z_N^{k_N+1} e^{-\frac{1}{4}\sum_l^N |z_l|^2}, \tag{2.75}$$

and it is justified by the fact that the numerical calculations have shown that the quasihole wave function created in the manner by Eq. (2.75) has a very good overlapping with the true quasihole wave function [71, 43]. From Eq. (2.75), we can also get the quasihole at z'

$$\Psi_m(z') = S_{z'}|m> = e^{-\frac{1}{4}\sum_l^N |z_l|^2} \prod_i (z_i - z') \prod_{i<j} (z_i - z_j)^m \tag{2.76}$$

and the quasielectron wave function is

$$S_{z'}^{\dagger}|m> = e^{-\frac{1}{4}\sum_l^N |z_l|^2} \prod_i (2\frac{\partial}{\partial z_i} - \bar{z}') \prod_{i<j} (z_i - z_j)^m \tag{2.77}$$

where $S_{z'}^{\dagger}$ and $S_{z'}$ are hermitian adjoint of each other. However numerical calculations have shown that the quasielectron wave function of Eq. (2.77) has not a good overlapping with the true quasielectron wave function as that of the quasihole wave function of Eq. (2.76)

The quasielectron wave function proposed by Jain in his theory [61] has a better overlapping with the true quasielectron wave function than the above quasielectron wave function proposed by Laughlin.

Refs. [69, 43, 39] have shown that the energy of the quasiparticle is a finite number and there is a energy gap in the FQHE. The energy spectrum of the collective excitations in the FQHE has also a energy gap [33]. There are two types of collective excitations in the FQHE. One is the cyclotron-resonance mode of the center mass, which can be viewed as an inter-Landau-level particle-hole excitation. Another is intra-Landau-level excitation, which can be viewed as the excitation of some kinds of the bound state of quasihole-quasilectrons (the charge of those collective excitations is zero).

Due to the energy gap, the state of the FQHE is imcompressible as in the IQHE. Because the real sample has impurities, the electron and hole bands, separated in the impurity-free case by a gap, are broadened into a continuum consisting of two bands of extended states separated by a band of localized one. Small deviation of the filling from $1/m$ will create some quasiparticles. Because of impurities, those quasiparticles will be trapped at those impurity sites. Thus the Fermi level will be only moved within the localized band. Those localized

states will not contribute to the Hall conductance and the extended states will carry the same current as the case of the filling being exactly at $1/m$.

2.3.4 Fractional charge and fractional statistics of quasiparticles

Laughlin found that the charge of the quasiparticle is fractional [69]. That the statistics of quasiparticles is fractional was conjectured by Halperin [48] in his hierarchical theory. The possibility of fractional statistics on two dimension surfaces was discovered in Refs. [77, 36, 116]

The hierarchical theory is used to explain the other observed fillings other than $1/m$ in the FQHE. The main point of the theory is that the ground state at each level of the hierarchy is a condensate of elementary excitations of the previous one. The theory was first proposed by Haldane [38]. However in Ref. [38], Haldane suggested that quasiparticles are bosons. In Ref. [70], Laughlin constructed the hierarchical states by describing quasiparticles as fermions. Now it has been understood that Haldane's (bosonic), Halperin's (anyonic) and Laughlin's (fermionic) descriptions of the hierarchical states are mathematically equivalent to each other and they can be mapped to each other by the singular gauge transformation in anyon theory. However, only the anyon description is physically correct. In a beautiful work [6], Arovas, Schriffer and Wilczek calculated the statistics of quasiparticles by calculating the Berry phase associated with adiabatic interchange of two quasiparticles and confirmed the conjecture in Ref. [48].

The fractional charge of the quasiparticle can be obtained in the following way [71]: The quasiparticle at z_0 can be generated by piecing the ground state with a thin flux-tube at z_0 and adiabaticlly turing on the flux from zero to a flux quantum Φ_0. A circular electric field is induced by changing the flux. Due to the Hall transport, the surrounding electrons will flow inward or outward to and from the point z_0 and some charge will be accumulated around the point z_0 in an area of size of a magnetic length. If the Hall conductance is $\sigma = e^2/mh$, then

the accumulated charge is

$$(\sigma/c)\Delta\Phi = (\sigma/c)\Delta \times (\pm\Phi_0) = \pm e/m, \tag{2.78}$$

where we have used the Maxwell equation and the relation between the Hall current and the electric field. The above argument does not involve any precise form of the quasiparticle wave functions.

The charge of the quasiparticle which has the wave function proposed by Laughlin has fractional charge $\pm e/m$. We can use the plasma analogy to obtain the charge of such a quasiparticle. For the Laughlin quasihole wave function, we have

$$|S_{z'}|m>|^2 = -\sum_{i<j} 2m^2 \ln|z_i - z_j| + \frac{1}{2}m\sum_k |z_k|^2 - \sum_i 2m \ln|z_i - z'|. \tag{2.79}$$

Now particles with the plasma "charge" m see another particle at z' with the plasma "charge" 1. The plasma will completely screen the charge of that particle by accumulating equal and opposite "charge" around it. The plasma "charge" contained in the screening cloud is the plasma "charge" -1. Just the real electric charge in the cloud is $-1/m$ of the charge of the electron $(-e)$. Similar reasoning applies for the Laughlin quasielectron wave function (the charge of the quasielectron is $-e/m$) (for example, see Ref. [72]).

We now follow Ref. [6] to derive the statistics of quasiparticles (the detail account of Ref. [6] can be found in Ref. [7]).

Let us move the quasiparticle adiabaticlly in a closed loop of radius R. According to Berry [12] (see also 2.2.3), the wave function will get an extra phase in addition to the usual phase $\int^t E(t')dt'$, with

$$d\gamma(t)/dt = i < \Psi(t)|d\Psi(t)/dt >, \tag{2.80}$$

and

$$\gamma_C = \gamma(T) - \gamma(0) = \oint d\gamma(t)/dt \tag{2.81}$$

We take the case of the quasihole as an example. The normalized wave function of the

quasihole is

$$\Psi_m(z_0(t)) = \mathcal{N}(z_0(t))e^{-\frac{1}{4}\sum_l^N |z_l|^2} \prod_i (z_i - z_0(t)) \prod_{i<j} (z_i - z_j)^m.$$

Thus we have

$$\frac{d}{dt}\gamma(t) = i\frac{d}{dt}\ln \mathcal{N}(z_0(t)) + i < \Psi_m | \frac{d}{dt} \sum_i^N \ln(z_i - z_0) | \Psi_m > . \tag{2.82}$$

Because the density in the presence of the quasihole is

$$\rho(z) =< \Psi_m | \sum_i^N \delta(z_i - z) | \Psi_m >, \tag{2.83}$$

we obtain

$$\frac{d}{dt}\gamma(t) = i\frac{d}{dt}\ln \mathcal{N}(z_0(t)) + i \int dxdy\rho(z)\frac{d}{dt}\ln(z - z_0(t)). \tag{2.84}$$

Since the normalization constant $\mathcal{N}(z_0(t))$ is a single-valued function of its argument, the integration of the first term of the right side of the above equation around the loop is zero. We write $\rho = \rho_0 + \delta\rho(z_0)$, where ρ_0 is the density of the Laughlin ground state without the presence of the quasihole, $\delta\rho(z_0)$ is concentrated around the quasiparticle coordinate.

If $z_0(t)$ is integrated anti-clockwise around a circle of a radius R, one finds

$$\begin{aligned} \oint_{|z_0(t)|=R} dt \frac{d}{dt}\ln(z - z_0(t)) &= \oint_{|z_0(t)|=R} dz_0 \frac{1}{z_0 - z} \\ &= 2\pi i\theta(R - |z|) \end{aligned} \tag{2.85}$$

where $\theta(x)$ is the step function ($\theta(x) = 1, x > 0\,, \theta(0) = 1/2,\ \theta(x) = 0, x < 0$). Substituting this equation to Eq. (2.84), the contribution of ρ_0 to the phase is

$$\gamma_C = i\int^R dxdy 2\pi i\rho_0 = -2\pi < N >_R = -2\pi\nu\Phi/\Phi_0 \tag{2.86}$$

where $< N >_R$ denotes the mean number of the electrons inside the loop and Φ is the flux enclosed in the loop. The correction $\delta\rho$ is small. Actually the identity $\gamma_C = -2\pi < N >_R$ is exact and the correction $\delta\rho$ is zero as a consequence of the rotational symmetry (this result was obtained by Haldane, quoted as private communication in Ref. [7]. see also Ref. [78]).

When a particle moves in a loop enclosed some magnetic flux, a phase will be obtained, which is equal to the charge of the particle (in unit of the charge of the electron) times the number of flux quantum (a unit quantum is Φ_0) enclosed in the loop and 2π. Thus the above equation implies that the charge of the quasihole is e/m.

Similarly, one can show that the charge of the quasielectron proposed by Laughlin is $-e/m$ (for example, Ref. [7]).

To determine the statistics of the quasiparticles, we consider the state with two quasiholes at z_a and z_b,

$$\Psi_m(z_a, z_b) = \mathcal{N}(z_a, z_b) e^{-\frac{1}{4}\sum_l^N |z_l|^2} \prod_i (z_i - z_a)(z_i - z_b) \prod_{i<j} (z_i - z_j)^m.$$

We also move the quasiparticle z_a adiabaticlly around a loop of radius R. Still we have $\gamma_c = -2\pi < N >_R$. If z_b is outside the loop, $< N >_R$ is unchanged. If z_b is inside the loop, the change of $< N >_R$ is $-\nu$ as there is a quasihole inside the loop. Thus we find an extra phase $\Delta\gamma_c = 2\pi\nu$. This implies that when two quasiholes interchange, we will get a phase $2\pi\nu/2 = \pi\nu$. If the filling is equal to $1/m$ with m an odd integer and larger than one, the quasiholes obey fractional statistics. Similar reasoning can be applied to quasielectrons. But we remark that, although the charge of the quasielectron has an opposite sign with respect to the quasihole, the statistics of quasielectrons is the same as the one of quasiholes.

2.3.5 Generalized Laughlin argument for the FQHE

The Laughlin argument for the quantization of the Hall conductance of the IQHE can be generalized to the case of the FQHE [102].

First, we need to know what is the differences and similarities between the states in the FQHE and IQHE.

We have shown previously that the picture of the IQHE is essentially a single-particle one, while the picture of the FQHE is not. The common feature of the IQHE and FQHE is that the states in both QHE are imcompressible quantum liquids as any excitations need a finite energy (the energy of the quasiparticle is finite in the FQHE. the quasiparticle in the

IQHE is an electron or hole. for example, we need $\hbar\omega$ energy to add an electron to a state with Landau levels completely filled).

Another distinct feature of the FQHE is that the fractional quantum Hall (FQH) state has degenerated ground states with periodic boundaries. Tao and Wu argued that, in order to get a fractional Hall conductance by using the Laughlin argument (see Sec. 2.2.1 for the case of the IQHE), there must exist degenerated ground states separated from other excited states by a gap for the FQHE on certain compactified space geometry [102].

Somewhat later, Su had shown the evidence of such degeneracy in computer simulations [100], Haldane and Rezayi had constructed the Laughlin wave functions on a torus and found that there is a center-mass degeneracy [40].

We use the thought experiment of Sec. 2.2.1 and assume that there is a degeneracy in the ground states. After we adiabaticlly turn on the flux threading the loop from zero to Φ_0, the system may not map back into the initial state and can map to another ground state (due to the gap in the spectrum, it can not map to other states with high energy). We increase the flux to $2\Phi_0, 3\Phi_0, \cdots$. If the system maps back to the initial state at the flux equal to $p\Phi_0$, there will be an integer number of electrons transferred from one edge to another. Suppose this integer is q, by using Eq. (2.30), the Hall conductance is

$$\sigma = \frac{qe^2}{ph} \tag{2.87}$$

Ref. [40] had shown that the Laughlin wave function on a torus at filling $1/m$ has a center-mass degeneracy m. We will have $p = m$ and $q = 1$ in this case. Generically, $\nu = q/p$ with q and p coprime to each other and p is the degeneracy of the ground states [104, 113].

The formula in Sec. 2.2.3 can be also generalized to the case of the FQHE [87, 104]. If p is the degeneracy of the FQH state, the averaged Hall conductance shall be

$$\begin{aligned} \sigma &= \frac{i}{p\Phi_0^2}\int_0^{\Phi_0} d\phi_1 \int_0^{p\Phi_0} d\phi_2 < d\tilde{\Omega}|d\tilde{\Omega} > \\ &= \frac{i}{p\Phi_0^2}\int_0^{\Phi_0} d\phi_1 \int_0^{p\Phi_0} d\phi_2 Tr(d\tilde{P}\tilde{P}d\tilde{P}). \end{aligned} \tag{2.88}$$

Note that the integral

$$\int_0^{\Phi_0} d\phi_1 \int_0^{p\Phi_0} d\phi_2 Tr(d\tilde{P}\tilde{P}d\tilde{P})$$

is an integer (it can be proved by using the argument at the end of Sec. 2.2.3), and equal to q (for example, Refs. [87, 104] and Ref. [120] for a review). But

$$\int_0^{\Phi_0} d\phi_1 \int_0^{\Phi_0} d\phi_2 Tr(d\tilde{P}\tilde{P}d\tilde{P})$$

is not an integer as the integrand are not the same at $\phi_2 = 0$ and $\phi_2 = \Phi_0$.

In a real system, impurities always lift the degeneracy of the ground states of a finite system. Weak impurities make the ground states quasidegenerated. However, Tao and Haldane in Ref. [104] (see also Ref. [113]) pointed out that the weak impurities will not change the topological invariant in Eq. (2.88) and thus the Hall conductance will remain unchanged under the presence of the weak impurities. Moreover, Niu and Thouless had analyzed the QHE with realistic boundary condition, striplike boundary condition instead of the boundary conditions used in the thought experiment (cylindrical, toroid, etc.) and found that the boundary correction to the quantization of the Hall conductance is exponentially small when the system size is large compared with the magnetic length [88].

The degeneracy of the ground states of the FQHE is related to fractional quantization of the Hall conductance and thus it is very important for us to understand it. We will discuss it in detail in various cases in the following chapters. Here we present a simple way to prove the existence of the degeneracy in the FQH states on a torus by following Ref. [104] (see also Ref. [54]).

The Hamiltonian is the one given in Sec. 2.1.2. The pseudomomenta are given by

$$\begin{aligned} \tilde{p}_x &= (p_x + eA_x/c) - eBy/c, \\ \tilde{p}_y &= (p_y + eA_y/c) + eBx/c, \end{aligned} \tag{2.89}$$

which commute with the Hamiltonian. The commutator of $\tilde{p}_x$ and $\tilde{p}_y$ is

$$[\tilde{p}_x, \tilde{p}_y] = -i\hbar eB/c. \tag{2.90}$$

The magnetic translation is

$$t(\mathbf{a}) = e^{i\mathbf{a}\cdot\tilde{\mathbf{p}}/\hbar}, \tag{2.91}$$

and the many-body magnetic translation is the product of the magnetic translations of all particles,

$$T(\mathbf{a}) = \prod_{i=1}^{N} t_i(\mathbf{a}). \tag{2.92}$$

It is easy to show that

$$t(\mathbf{a})t(\mathbf{b}) = t(\mathbf{b})t(\mathbf{a})e^{i(\mathbf{a}\times\mathbf{b})/l^2} \tag{2.93}$$

where l is the magnetic length and $\mathbf{a}\times\mathbf{b} = a_1b_2 - a_2b_1$.

We consider a rectangular torus of size L_1 and L_2. The periodic boundary conditions on the many-body wave function is

$$\begin{aligned} t_i(\mathbf{L_1})\Psi &= e^{iL_1\cdot\tilde{p}_x/\hbar}\Psi = \Psi, \\ t_i(\mathbf{L_2})\Psi &= e^{iL_2\cdot\tilde{p}_y/\hbar}\Psi = \Psi \end{aligned} \tag{2.94}$$

The magnetic flux out of the surface is

$$N_\phi = \frac{L_1L_2}{2\pi l^2} \tag{2.95}$$

and it must be an integer due to Dirac quantization. If the filling is $\nu = q/p$, we have

$$N = N_\phi q/p. \tag{2.96}$$

The operators which leave the boundary condition of Eq. (2.94) unchanged are

$$T_1 = T(L_1/N), T_2 = T(L_2/N). \tag{2.97}$$

We can thus choose a ground state Ψ_0 to be an eigenstate of T_2,

$$T_2\Psi_0 = e^{i\alpha}\Psi_0 \tag{2.98}$$

where α is a real number because of the unitarity of T_2. However, because

$$T_1T_2 = T_2T_1i2\pi q/p, \tag{2.99}$$

then we define the p states

$$\Psi_n = T_1^n \Psi_0, n = 0, 1, \cdots, q-1, \tag{2.100}$$

with

$$T_2 \Psi_n = e^{i2\pi nq/p} \Psi_n. \tag{2.101}$$

These states have the same energy with Ψ_0 and they are orthogonal to each other because they are different eigenstates of T_2. Thus the ground states must be at least p-fold degenerated. If there is no accidental degeneracy, there are exactly p ground states.

3 Hierarchical wave function in the FQHE

The theory of the FQHE at filling factor $\nu = 1/m$ (or its particle-hole conjugation state with $\nu = (m-1)/m$) is well-established based on Laughlin's ground state. There exist several other approaches, for example, ring exchange theory [64]. However, those alternative approaches, in order to be correct, have to be equivalent to Laughlin's theory [43].

The situation at other filling factors is less clear. The theory for other filling factors is called as the hierarchical theory. There exist several theories, the standard hierarchical theory [38, 48], the variant hierarchical theory [70, 32, 84], and the Jain hierarchical theory [61]. We will discuss only the standard hierarchical theory in this thesis.

We would like to mention here the Jain theory before discussing the standard hierarchical theory. Jain proposed that the FQHE can be understood as a manifestation of the IQHE of composite fermionic objects consisting of electrons bound to an even number of flux quanta, and thus gave a unified view of the FQHE and IQHE. Some recent experiments have given evidences to support the Jain theory.

The relations between the standard hierarchical theory and the Jain theory are not clear yet. However the Jain theory may be mathematically equivalent with the standard hierarchical theory as shown in Ref. [50] (see also Ref. [95]).

We will study the standard hierarchical wave function in this chapter. Such wave function was constructed by Halperin in Ref. [48]. The wave function has been further studied in Refs. [71, 72] and Ref. [14, 93].

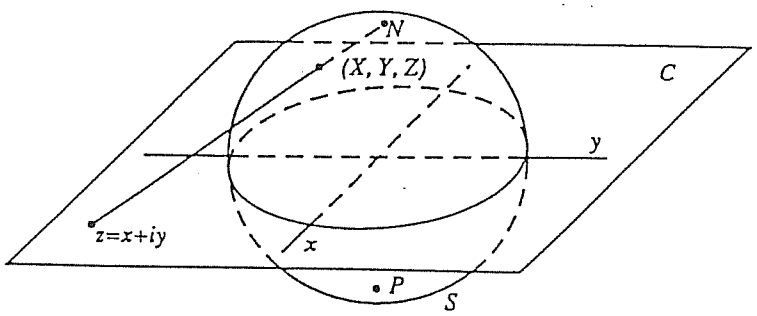

Figure 3.1: Projective coordinates of the sphere.

In this chapter, we first review the standard hierarchical theory. We construct the hierarchical wave function on the sphere. We also present another form of the hierarchical wave function given by Read [93]. We will construct the wave function in the spin-singlet hierarchy based on the spin-singlet state proposed by Halperin [47]. The particle-hole conjugation in the FQHE will be discussed. We also show how to calculate the spin of quasiparticles.

3.1 Spin-polarized hierarchical theory

3.1.1 Halperin's hierarchical wave function

We will use the projective coordinate to construct hierarchical wave function of the spin-singlet FQHE (SFQHE) on the sphere [78, 79] (for the projective coordinate, see Ref. [89]; see also Ref. [21]) Ref. [38] had constructed the Laughlin wave function on the sphere by using another kind of coordinates on the sphere. The projective coordinate has been used to construct hierarchical wave function in the spin-polarized FQHE on the sphere[78, 79]. Here the same notation will be used as that in Ref. [78, 79, 82].

In the projective coordinates x, y, the metric g of the sphere is given by

$$g_{\alpha\beta}(x) = \frac{1}{(1+r'^2)^2}\begin{pmatrix} 1 & 0 \\ 0 & 1 \end{pmatrix} . \tag{3.1}$$

where $r'^2 = \frac{x^2+y^2}{4R^2}$, and R is the radius of the sphere. For simplicity, we assume the radius of the sphere $R = \frac{1}{2}$. The Hamiltonian of electron in a magnetic monopole field is (the Hamiltonian with Laplace-Beltrami operator ordering differs from this Hamiltonian by a constant) then

$$H = \frac{2}{M_e}(1+z\bar{z})^2(P_z - eA_z)(P_{\bar{z}} - eA_{\bar{z}}) . \tag{3.2}$$

Note that the quantum mechanics of a particle interacting with a magnetic monopole field was discussed in Ref. [121]. The magnetic monopole field eA_z is

$$eA_z = -\frac{\imath\phi}{2}\frac{\bar{z}}{1+z\bar{z}} , \tag{3.3}$$

where ϕ is the magnetic flux in the unit of the fundamental flux and it is an integer. P_{z_i} and $P_{\bar{z}_i}$ in Eq. (3.2) are the operators

$$P_{z_i} = -\imath\partial z_i \, , P_{\bar{z}_i} = -\imath\partial_{\bar{z}_i} . \tag{3.4}$$

We have put the Dirac singularity of the monopole field at $z = \infty$. By solving the equation $(P_{\bar{z}} - eA_{\bar{z}})\Psi = 0$, the ground state of the electron is

$$\psi = z^k(1+z\bar{z})^{-\frac{\phi}{2}} , \tag{3.5}$$

where $0 \leq k \leq \phi$ with k being an integer (in order that the ground state is normalizable). The Laughlin wave function [69] shall be

$$\Psi = \prod_{i<j}(z_i - z_j)^m \prod_i (1+z_i\bar{z}_i)^{-\frac{\phi}{2}} , \tag{3.6}$$

where m is an odd integer. It is known that the state of the FQHE on the sphere and plane is non-degenerate due to the reason that, by adding Coulomb interaction, the Landau degeneracy is lifted. Suppose that the system still has the rotational symmetry, the ground must be rotationally invariant. Under the rotation, the coordinate is transformed as

$$z' = \frac{az+b}{cz+d} \, , \begin{pmatrix} a & b \\ c & d \end{pmatrix} \in SO(3) , \tag{3.7}$$

which is generated by the rotations around three axes

$$\begin{aligned} R_x &= \frac{1}{\sqrt{2}} \begin{pmatrix} (1+\cos\alpha)^{\frac{1}{2}} & \imath\,(1-\cos\alpha)^{\frac{1}{2}} \\ \imath\,(1-\cos\alpha)^{\frac{1}{2}} & (1+\cos\alpha)^{\frac{1}{2}} \end{pmatrix} \\ R_y &= \frac{1}{\sqrt{2}} \begin{pmatrix} (1-\cos\beta)^{\frac{1}{2}} & (1-\cos\beta)^{\frac{1}{2}} \\ -(1-\cos\beta)^{\frac{1}{2}} & (1-\cos\beta)^{\frac{1}{2}} \end{pmatrix} , \\ R_z &= \begin{pmatrix} \exp\frac{\imath\gamma}{2} & 0 \\ o & \exp\frac{-\imath\gamma}{2} \end{pmatrix} . \end{aligned} \tag{3.8}$$

Under the rotation $z' = \frac{az+b}{cz+d}$, the wave function is transformed into [78, 79]

$$R(a,b,c,d)\Psi(z_i) = \prod_i \left(\frac{\bar{c}\bar{z}_i + \bar{z}_i}{cz_i+d}\right)^{\frac{-\phi}{2}} \Psi\left(\frac{az_i+b}{cz_i+d}\right) , \tag{3.9}$$

where R is the corresponding quantum operator of the rotation. The transformation of $z_i - z_j$ and $1 + z\bar{z}$ will be:

$$\begin{aligned} z_i' - z_j' &= \frac{z_i - z_j}{(cz_i+d)\,(cz_j+d)} , \\ 1 + z'\bar{z}' &= \frac{1+z\bar{z}}{(cz+d)\,(\bar{c}\bar{z}+\bar{d})} , \end{aligned} \tag{3.10}$$

and

$$d_{ij} = \frac{z_i - z_j}{(1+z_i\bar{z}_i)^{\frac{1}{2}}(1+z_j\bar{z}_j)^{\frac{1}{2}}} , \tag{3.11}$$

will be transformed as

$$d_{ij}' = \left(\frac{\overline{cz_i+d}}{cz_i+d}\right)^{\frac{1}{2}} \left(\frac{\overline{cz_j+d}}{cz_j+d}\right)^{\frac{1}{2}} d_{ij} . \tag{3.12}$$

Implementing the wave function being rotationally invariant, that is, $R\Psi = \Psi$, one gets

$$\phi = m(N-1) , \tag{3.13}$$

where N is the number of the electrons. Then the wave function Eq. (3.6) equals to $\prod_{i<j} d_{ij}^m$. The hierarchical wave function can be constructed as follows (for the case on the plane, see Ref. [14]). The *normalized* wave function in the presence of quasiparticles at z_α' and at the filling $\nu = \frac{1}{m}$ is

$$\Psi_e = \prod_{i<j} d_{ij}^m \prod_{i\alpha} d_{i\alpha} \prod_{\alpha<\beta} d_{\alpha\beta}^{\frac{1}{m}} , \tag{3.14}$$

The Laughlin type wave function of the quasiparticles is

$$\Psi_q = \prod_{\alpha<\beta} \bar{d}_{\alpha\beta}^{\frac{1}{m}} (\bar{d}_{\alpha\beta})^p \ , \tag{3.15}$$

where p is a positive even integers. Quasiparticles satisfy fractional statistics as we have concluded it in the last chapter (for anyons on the sphere, see also Ref. [76]). The hierarchical wave function of the electrons is given by

$$\Psi(z_i) = \int \prod_{\alpha} dv_\alpha \Psi_e(z_i, z'_\alpha) \Psi_q(z'_\alpha) \ , \tag{3.16}$$

where $dv_\alpha = \frac{d^2 z'_\alpha}{(1+z'_\alpha \bar{z}'_\alpha)^2}$ is rotationally invariant measure on the sphere. Requiring $\Psi(z_i)$ to be rotationally invariant, $R\Psi(z_i) = R$, we get the relation

$$\begin{aligned} m(N_e - 1) + N_q &= \phi \ , \\ N_e - p(N_q - 1) &= 0 \ , \end{aligned} \tag{3.17}$$

where N_e is the electron number and N_q is the quasiparticle number. From Eq. (3.17) , one can derive the filling

$$\nu = \frac{1}{m + \frac{1}{p}} \ . \tag{3.18}$$

By considering the excited state of Eq. (3.15) and let those quasiparticles of the quasiparticles be condensed, we can get the next hierarchical state.

By proceeding in this way, the high level hierarchical state can be constructed. We write the general n-level hierarchical wave function [79] (for the wave function on the plane, see Ref. [48, 71, 72, 14])

$$\begin{aligned} \Psi(z_i) = & \prod_{i<j}^{N_e} d(z_i, z_j)^{p_1} \prod_{s=2}^{n} \int \prod_{i=1}^{N_2} \frac{d^2 z_i^2}{(1 + z_i^2 \bar{z}_i^2)^2} \cdots \int \prod_{i=1}^{N_n} \frac{d^2 z_i^n}{(1 + z_i^n \bar{z}_i^n)^2} \prod_{s=2}^{n} \prod_{i,j=1}^{N_s} \\ & | \ d(\tilde{z}_i^s, \tilde{z}_j^s) \ |^{2sgn(q_{s-2})\frac{\theta_{s-1}}{\pi}} \quad d(\tilde{z}_i^s, \tilde{z}_j^s)^{p_s} \prod_{i,j}^{N_s, N_{s+1}} d(\tilde{z}_i^s, \tilde{z}_j^{s+1}) \ , \end{aligned} \tag{3.19}$$

where $\tilde{z}^s = z^s$ if s is odd and $\tilde{z^s} = \bar{z}^s$ if s is even ($s = 1, 2, \cdots, n$); N_1 is the number of the electrons N_e and N_s with $s = 2, 3, \cdots, n$ is the number of quasiparticles in the sth hierarchy

level; z_i^s are the coordinates of the quasiparticles in level s and z_i^1 are the coordinates of the electrons, that is $z_i^1 = z_i$; p_1 is an odd positive number and p_s with $s = 2, 3, \cdots, n$ is an even positive integer. Moreover, we have the relations

$$q_{s+1} = -\frac{q_s}{p_{s+1} - sgn(q_s)\frac{\theta_s}{\pi}} , \tag{3.20}$$

and

$$\frac{\theta_{s+1}}{\pi} = \frac{sgn(q_s)}{p_{s+1} - sgn(q_s)\frac{\theta_s}{\pi}} , \tag{3.21}$$

where $q_0 = -1$, $\theta_0 = 0$, and q_s is the charge of the quasiparticle in the level $s+1$; θ_s is the statistics parameter of the quasiparticle in the level $s+1$. Following the example, the wave function of the FQHE must be nondegenerate, and therefore rotationally invariant on the sphere. We apply the rotational operator R to the wave function, making it a requirement that the wave function is invariant under the rotation. After some calculations, we obtain

$$\begin{aligned}
&p_1(N_e - 1) + (N_2 - 1) = \phi - 1 , \\
&(N_e - 1) - p_2(N_2 - 1) - (N_3 - 1) = 0 , \\
&\vdots , \\
&(-1)^s(N_{s-1} - 1) - (-1)^s p_s(N_s - 1) + (-1)^{s+1}(N_{s+1} - 1) = 0 , \\
&\vdots , \\
&(-1)^n(N_{n-1} - 1) - (-1)^n p_n(N_n - 1) = (-1)^{n+1} .
\end{aligned} \tag{3.22}$$

It can be rewritten in a more compact form

$$\Lambda_{ij}(N - I)_j = \Phi_i \;\; i = 1, \cdots, n . \tag{3.23}$$

The matrix Λ is

$$\Lambda_{ij} = \begin{pmatrix}
p_1' & 1 & \dots & 0 & 0 & 0 \\
1 & p_2' & -1 & 0 & 0 & 0 \\
0 & -1 & p_3' & 1 & 0 & \dots \\
\cdot & \cdot & \cdot & \dots & \cdot & \cdot \\
\cdot & \cdot & \cdot & \cdot & \dots & (-1)^n \\
0 & 0 & 0 & \dots & (-1)^n & p_n'
\end{pmatrix} , \tag{3.24}$$

with $N_1 = N_e$; $I_i = 1$; $\Phi_1 = \phi - 1$, $\Phi_n = (-1)^{n+1}$, $\Phi_i = 0$ when $i \neq 1$; and $p_i' = (-1)^{i+1} p_i$. We can solve the above equation to get filling factor $\nu = \frac{N_e}{\phi}$ in the limit of N_e, ϕ being much larger than 1,

$$\nu = \cfrac{1}{p_1 + \cfrac{1}{p_2 + \cfrac{1}{\cdots + \cfrac{1}{p_n}}}} . \tag{3.25}$$

We can also construct the quasiparticle's excitations in such hierarchical state. This was discussed in Ref. [14]. We will discuss the fractional statistics and spin of the quasiparticle in the hierarchical state in this thesis. But we will not discuss the wave function of the Halperin's hierarchical state in the presence of quasiparticles.

3.1.2 Quasiparticle's spin in the Laughlin state

We will discuss the spin of the quasiparticle in the Laughlin state in this subsection. The spin of the quasiparticle in the hierarchical state will be discussed in another chapter.

The hierarchical wave function can be obtained when the quasiparticles are condensed. We can analyze the hierarchical wave function to obtain the spin of the quasiparticle [78, 79]. The idea is that, from the hierarchical wave function, we can obtain the Hamiltonian of the quasiparticles and then the spin of the quasiparticle by analyzing the Hamiltonian. The spin of the quasiparticles can also be obtained by calculating Berry phase when the quasiparticle moves in a closed path [78].

The Hamiltonian of the quasiparticles can be obtained by using the fact that the suggested wave function of quasiparticles, which is Laughlin type [48], is the ground state of the Hamiltonian, or by using Berry phase method [14]. We shall remark that, the lagrangian of the quasiparticles are described by the vortex (center coordinate) dynamics, and the lagrangian of vortices (quasiparticles) does not contain any mass term[126]. The Hilbert space of the Hamiltonian which we will derive in the following shall be restricted to the ground state. The ground state of the following Hamiltonian is the same as the one obtained by

analyzing the vortex dynamics theory of quasiparticles. So to be rigorous, we shall proceed our discussion from the beginning based on vortex dynamics theory.

The problem about the spin of the quasiparticle has also been addressed in Ref. [115, 98]. The result about the spin of the quasiparticle in Ref. [78] agrees with the one in Ref. [115]. However there are some differences in the definition of the spin between Ref. [78, 79] and Ref. [115], which we explain later. s in Ref. [78, 79] corresponds to S_{total} in Ref. [115]. Ref. [115] has also calculated the spin of the quasiparticle in the general hierarchical state and multilayered FQHE state (which we can also use the method described in Ref. [78, 79] or here to calculate). The spin-statistics relation of the quasiparticle in the hierarchical state and multilayered FQHE state usually is not standard one [115], even it is found that the quasiparticle in Laughlin state (with filling as $\frac{1}{m}$) has the standard spin-statistics relation [78, 79]. We are aware that the spin of the quasiparticle in the Laughlin state calculated in Ref. [98] is different from the one in Ref. [78, 79, 115].

To calculate the spin of the quasiparticle in the Laughlin state, let us consider the simplest hierarchical state, the level 2 hierarchical state, with filling $\nu = \frac{1}{m+\frac{1}{p}}$ and m being a positive odd number and p an even positive integer. The wave function is

$$\Psi(z_i) = \int \prod_{\alpha} dv_\alpha \Psi_e(z_i, z_\alpha) \Psi_q(z_\alpha) \,, \tag{3.26}$$

where z_i is the coordinate of the electron and dv_α is the rotationally invariant measure of the quasiparticle coordinate z_α. $\Psi_e(z_i, z_\alpha)$ is the normalized wave function of the electrons in the presence of the quasiparticles with coordinates z_α and $\Psi_q(z_\alpha)$ is the Laughlin wave function of the quasiparticle. They are

$$\Psi_e = \prod_{i<j} d_{ij}^m \prod_{i\alpha} d_{i\alpha} \prod_{\alpha<\beta} |d_{\alpha\beta}|^{\frac{1}{m}} \,, \tag{3.27}$$

and

$$\Psi_q = \prod_{\alpha<\beta} |d_{\alpha\beta}|^{\frac{1}{m}} (\bar{d}_{\alpha\beta})^p \,, \tag{3.28}$$

with the relation

$$m(N_e - 1) + N_q = \phi \,,$$

$$N_e - p(N_q - 1) = 0 \ , \tag{3.29}$$

where N_e is the number of electrons, N_q is the number of quasiparticles. Now we need find the Hamiltonian of the quasiparticles of which $\Psi_q(z_\alpha)$ is the ground state (because $\Psi_q(z_\alpha)$ is the Laughlin wave function of the quasiparticles). The wave function Ψ_q can be written as

$$\Psi_q = \prod_{\alpha<\beta} (z_\alpha - z_\beta)^{\frac{1}{2m}} (\bar{z}_\alpha - \bar{z}_\beta)^{\frac{1}{2m}+p} (1 + \bar{z}_\alpha z_\alpha)^{\frac{1}{2}(p+\frac{1}{m})(N_q-1)} \ . \tag{3.30}$$

By using the relation of Eq. (3.29), it is easy to derive that $(p + \frac{1}{m})(N_q - 1) = (1 - \frac{1}{m}) + \frac{\phi}{m}$. So we find that the Hamiltonian of the quasiparticles is

$$H = \frac{2}{m} \sum_{i=1}^{N_q} (1 + z_i \bar{z}_i)^2 \, (P_{\bar{z}_i} - A_{\bar{z}_i})(P_{z_i} - A_{z_i}) \ , \tag{3.31}$$

where

$$A_{z_i} = \frac{-i}{2m} \sum_{j \neq i} \frac{1}{z_i - z_j} - \frac{i}{2}(\frac{1}{m} - 1) \frac{\bar{z}_i}{1 + z_i \bar{z}_i} + \frac{i\phi}{2m} \frac{\bar{z}_i}{1 + z_i \bar{z}_i} \ . \tag{3.32}$$

Let us try to give a interpretation to Eq. (3.32). The first term on the right of Eq. (3.32) is connected with the fact of the quasiparticles satisfying the fractional statistics. The last term on the right represents the interaction between the quasiparticles and the magnetic field. Compared to the Hamiltonian of the electron, the quasiparticle has an opposite sign of charge with respect to that of the electron, and the value is $\frac{1}{m}$ if it is assumed that the electron charge is -1. However, the meaning of the second term on the right of the equation is not clear. It represents a monopole with $1 - \frac{1}{m}$ unit flux. Its presence does not depend on the presence of the other quasiparticles or the applied magnetic monopole field. So we can assume that this term is related with only the intrinsic structure of the quasiparticle and it will contribute to the intrinsic spin of the quasiparticle (for example, the **intrinsic spin** of electron is $\frac{1}{2}$. But the **spin** of electron may not be $\frac{1}{2}$ if there is a magnetic monopole). The value of the intrinsic spin is

$$s = \frac{1}{2}(1 - \frac{1}{m}) \ . \tag{3.33}$$

The quasiparticle has the statistical parameter, $\theta = -\frac{1}{m}$. By the statistical parameters,

we mean that, in anyon (singular) gauge, when we move one particle anti-clockwise around another particle (inside the path there are no other particles), we get a phase $e^{i2\pi\theta}$.

We consider the case of $m = 1$, which corresponds to the case of integer quantum Hall effect. The excitation or quasiparticle is the electron itself. From Eq. (3.33), we obtain $s = 0$ in this case. But we expect $s = 1/2$.

What we calculate in Eq. 3.33 is the spin in which the Pauli spin is not included. The fermion field of the electron can be represented by $\psi_\alpha(z), \alpha = 1, 2$, where α is the Pauli spin index. The operator of the angular momentum can be written as

$$J_i^t = J_i^c + \frac{\sigma_i}{2} , \tag{3.34}$$

where $\frac{\sigma_i}{2}$ is Pauli matrix, and J_i^c is the operator which will generate the transformation of the coordinates and a cocycle factor on the wave function due to the presence of the magnetic monopole or other monopole fields etc.. In the polarized FQHE, we usually consider only one component $\psi_1(z)$. Thus we forget the term $\frac{\sigma_i}{2}$ in J_i^t, and the spin of the electron is considered to be zero. Similarly we expect that the field of the quasiparticle can be represented by $\psi_{q\alpha}(z)$ $\alpha = 1, 2$ with α being the Pauli spin index. The angular momentum of the quasiparticles shall still be described by Eq. (3.34). In the polarized FQHE, we only consider one component, for example, $\psi_{q1}(z)$. Usually the term $\frac{\sigma_i}{2}$ is not taken into account. The intrinsic spin of the quasiparticle we calculate in Eq. (3.33) is from the monopole field of $1 - \frac{1}{m}$ unit flux and so is only contained in J_i^c.

If we take the Pauli spin into account, the value of the intrinsic spin of the quasiparticle shall be $s^t = \frac{1}{2}(1 - \frac{1}{m}) + \frac{1}{2} = 1 - \frac{1}{2m}$. θ and s^t satisfy the standard spin-statistics relation.

To summarize, we find that anyons in the FQHE not only satisfy fractional statistics, also have fractional spin. The spin-statistics relation is the standard one in the Laughlin state.

Moreover, the (intrinsic) spin of anyons in the FQHE should not depend on the topology of the space exactly as the electron (intrinsic) spin should not depend on the topology of the space. We will prove this point in chapter 6. Our discussion about the anyon spin and

statistics on the sphere also should apply to the case of the FQHE on the torus or other surfaces. However on the other surfaces, it is not so easy to work out the value of the (intrinsic) spin of the quasiparticles. We will return to this problem in chapter 6.

The above results can be explained through the Berry phase [12, 6, 7]. Suppose there is only one quasiparticle in the Laughlin state with the coordinate z_α, the wave function is

$$\Psi = \prod_{i<j} d_{ij}^m \prod_i d_{i\alpha} . \tag{3.35}$$

Now let z_α move in a closed path. The wave function will get a phase γ_c (Berry phase). The phase $\gamma(t)$ at time t satisfies the equation

$$\frac{d\gamma(t)}{dt} = i < \Psi(t)|\frac{d}{dt}|\Psi(t) > , \tag{3.36}$$

or

$$\frac{d\gamma(t)}{dt} = i\sum_i < \Psi(t)|\frac{d(\ln d_{i\alpha})}{dt}|\Psi(t) > . \tag{3.37}$$

Suppose $|z_\alpha|$ to go to infinity, and in the same time rotates z_α anti-clockwise, then from Eq. (3.37), we get

$$\gamma_c = -2\pi N , \tag{3.38}$$

with N being the number of the electrons. If the closed path of z_α subtends a sphere angle Ω, we will expect the Berry phase as

$$\gamma_c = -\frac{2\pi N\Omega}{4\pi} = -\frac{N\Omega}{2} . \tag{3.39}$$

For the Laughlin state, $m(N-1) = \phi_0$ (ϕ_0 is the original flux), so $N = \frac{\phi_0}{m} + 1$. Now to create a quasiparticle, we need to add a unit magnetic flux. The wave function of Eq. (3.35) corresponds the one that the magnetic flux is $\phi = \phi_0 + 1$. So

$$N = \frac{\phi}{m} - \frac{1}{m} + 1 . \tag{3.40}$$

Hence

$$\gamma_c = -\frac{\Omega}{2}\frac{\phi}{m} - \frac{\Omega}{2}(-\frac{1}{m} + 1) . \tag{3.41}$$

The first term is due to the fact that the quasiparticle has the electric charge $\frac{1}{m}$, and therefore interacts with the magnetic field. When the quasiparticle moves around in the presence of the magnetic field, the wave function will get a phase which is proportional to the flux enclosed in the path. The last term is due to the intrinsic structure of the quasiparticle. Every quasiparticle is bounded with a monopole field with $-\frac{1}{m}+1$ unit flux. This term will contribute to the *intrinsic* spin of the quasiparticle and the spin contributed from this term is $\frac{1}{2}-\frac{1}{2m}$. We emphasize the word *intrinsic* in order to keep in the mind the difference to the other spins which is due to the interaction with the applied magnetic field. So by using Berry phase, we can also obtain the spin of the quasiparticle in the FQHE.

We will discuss the spin of the quasiparticle on Riemann surfaces in chapter 6. We will find there that the spin of the quasiparticle is independent on the topology of the surface.

The spin of the quasiparticle in the hierarchical state will be also discussed in chapter 6.

3.2 Read's hierarchical wave function

Read proposed another form of the hierarchical wave function based on Halperin's hierarchical wave function [93].

$$\begin{aligned}\Psi(z_i) &= \prod_{i<j}^{N_e} d(z_i,z_j)^{p_1} \prod_{s=2}^{n} \int \prod_{i=1}^{N_2} \frac{d^2 z_i^2}{\left(1+z_i^2\bar{z}_i^2\right)^2} \cdots \int \prod_{i=1}^{N_n} \frac{d^2 z_i^n}{\left(1+z_i^n\bar{z}_i^n\right)^2} \prod_{s=2}^{n} \prod_{i<j}^{N_s} \\ &\quad d(z_i{}^s, z_j{}^s)^{p_s} \prod_{i,j}^{N_s,N_{s+1}} [d(z_i{}^s, z_j{}^{s+1})]^{-1} \ . \end{aligned} \tag{3.42}$$

The notation used in the above formula is the same as one about Halperin's hierarchical wave function. We define a matrix Λ associated with this wave function as

$$\Lambda_{ij} = \begin{pmatrix} p_1 & -1 & \dots & 0 & 0 & 0 \\ -1 & p_2 & -1 & 0 & 0 & 0 \\ 0 & -1 & p_3 & -1 & 0 & \dots \\ \cdot & \cdot & \cdot & \dots & \cdot & \cdot \\ \cdot & \cdot & \cdot & \cdot & \dots & -1 \\ 0 & 0 & 0 & \dots & -1 & p_n \end{pmatrix} . \tag{3.43}$$

By using the rotational invarince of the wave function, we have

$$p_1(N_e-1)-N_2=\phi \ ,$$

$$
\begin{aligned}
&-N_e + p_2(N_2 - 1) - N_3 = 0 \ , \\
&\vdots \ , \\
&-N_{s-1} + p_s(N_s - 1) - N_{s+1} = 0 \ , \\
&\vdots \ , \\
&-N_{n-1} + p_n(N_n - 1) = 0 \ .
\end{aligned} \tag{3.44}
$$

We obtain the filling from the above equation,

$$
\nu = \cfrac{1}{p_1 - \cfrac{1}{p_2 - \cfrac{1}{\cdots - \cfrac{1}{p_n}}}} \ . \tag{3.45}
$$

In the section of the next chapter about Read's hierarchy on the torus, we will discuss the quasiparticle in Read's hierarchy and the wave function in the presence of quasiparticles.

3.3 Spin-singlet hierarchy

We shall generalize the above method to construct the hierarchical wave function of the spin-singlet FQHE.

We will construct here the hierarchical wave function of the spin-singlet fractional quantum Hall effect, which turns out to satisfy Fock cyclic condition. The spin-statistics relation of the quasiparticles in the spin-singlet fractional quantum Hall effect is also discussed.

When the magnetic field is not strong enough, the electron spin maybe not be polarized. Halperin had proposed a class of state with half spins reversed which are spin-singlet states [47] and Haldane and Rezayi[42] had proposed a spin-singlet state at a filling factor $\nu = \frac{1}{2}$. However the hierarchical wave function for the spin-non-polarized case, for example, the spin-singlet FQHE (SFQHE), is not still fully understood as it was pointed out by Girvin [91]. In particular, it is much more difficult to obtain the hierarchical wave function of the SFQHE subjected to the requirement of the Fock cyclic condition (FCC). So it remains an interesting problem. The task of the present section is to construct the hierarchical wave function based

on the Halperin spin-singlet state. However we shall point out that this hierarchical scheme does not include the Haldane and Rezayi state[42].

3.3.1 Spin-nonpolarized FQHE

Halperin had proposed some states with half spin reversed[47],

$$\Psi_{mmn} = \prod_{i<j}^{N}\prod_{k,l}^{N}[d(z_i,z_j)]^m[d(w_i,w_j)]^m[d(z_k,w_l)]^n\,, \tag{3.46}$$

where m is an odd integer, z_i are the coordinates of the up-spin electrons and w_i are the coordinates of the down-spin electrons. We can also interpret z_i as the coordinates of the up-layer electrons and w_i as the coordinates of the down-layer electrons in a double layered FQHE. Now We would like to discuss a more general type wave function [122, 118],

$$\Psi_{m_1,m_2,n} = \prod[d(z_i,z_j)]^{m_1}[d(w_i,w_j)]^{m_2}[d(z_k,w_l)]^n\,. \tag{3.47}$$

Because the up-layer electrons z_i can be distinguished from the down-layer electrons w_i, so the wave function does not need to be anti-symmetrized. By using the rotational invariance of the wave function $\Psi_{m_1,m_2,n}$[38, 78, 79], we have

$$m_1(N_1-1)+nN_2 = nN_1+m_2(N_2-1) = \phi\,, \tag{3.48}$$

because all electrons are exposed to the same magnetic field and in the lowest Landau level. N_1 (N_2) is the number of the up (down)-layer electrons and ϕ is the magnetic flux. According to Eq. (3.48), the filling is (N_1, N_2, ϕ etc. are always assumed to be much larger than 1)

$$\nu = \frac{N_1+N_2}{\phi} = \frac{m_1+m_2-2n}{m_1m_2-n^2}\,. \tag{3.49}$$

When $m_1 = m_2 = m$, the filling is then $\frac{2}{m+n}$. Now we introduce a two dimension lattice with bases

$$e_i \cdot e_j = \Lambda_{i,j} = \begin{pmatrix} m_1 & n \\ n & m_2 \end{pmatrix}\,. \tag{3.50}$$

The bases of the inverse lattice is defined by $e_i^* \cdot e_j = \delta_{i,j}$, and thus we have

$$e_i^* \cdot e_j^* = \Lambda_{i,j}^{-1} = \frac{1}{m_1m_2-n^2}\begin{pmatrix} m_2 & -n \\ -n & m_1 \end{pmatrix}\,. \tag{3.51}$$

The wave function $\Psi_{m_1,m_2,n}$ can be written now as

$$\Psi_{m_1,m_2,n} = \prod [d(z_i,z_j)]^{e_1\cdot e_1}[d(w_i,w_j)]^{e_2\cdot e_2}[d(z_k,w_l)]^{e_1\cdot e_2}\,. \tag{3.52}$$

The wave function with quasiparticles at z'_α and w'_α is

$$\begin{aligned}\Psi_{m_1,m_2,n}(z'_\alpha,w'_\alpha) &= \prod d(z_i-z'_\alpha)d(w_i-w'_\alpha)\Psi_{m_1,m_2,n}\\ &= \prod d(z_i-z'_\alpha)^{e_1\cdot e_1^*}d(w_i-w'_\alpha)^{e_2\cdot e_2^*}\Psi_{m_1,m_2,n}\,.\end{aligned} \tag{3.53}$$

Eq. (3.48) now becomes

$$\begin{aligned} m_1(N_1-1)+nN_2+N'_1 &= \phi\,,\\ nN_1+m_2(N_2-1)+N'_2 &= \phi\,,\end{aligned} \tag{3.54}$$

where N'_1 (N'_2) is the number of the up(down)-layer quasiparticles. The plasma charge of the electron z_i (w_i) is e_1 (e_2) and the plasma charge of the quasiparticle z'_α (w'_α) is e_1^* (e_2^*). The normalized wave function can be obtained by using the plasma analogue on the sphere,

$$\begin{aligned}\Psi_{m_1,m_2,n}(z'_\alpha,w'_\alpha)_{nor} = \quad & \prod_{i,\alpha} d(z_i-z'_\alpha)^{e_1\cdot e_1^*}d(w_i-w'_\alpha)^{e_2\cdot e_2^*}d(z'_\alpha-z'_\beta)^{e_1^*\cdot e_1^*}\\ & d(w'_\alpha-w'_\beta)^{e_2^*\cdot e_2^*}d(z'_\alpha-w'_\beta)^{e_1^*\cdot e_2^*}\Psi_{m_1,m_2,n}\,.\end{aligned} \tag{3.55}$$

The normalization constant of the above wave function will be independent on the coordinates of the quasiparticles in the limit of the quasiparticles being quite far away from each other. The statistics parameter θ_{ij} (when exchanging two kinds of particles i and j, we will get a phase $e^{i\theta_{ij}\pi}$) of the quasiparticle can be read from the the wave function (3.55),

$$\theta_{ij} = -e_i^*\cdot e_j^* = -\Lambda^{-1}\,. \tag{3.56}$$

The electric charge of the quasiparticle z'_α is $\Lambda^{-1}_{1,1}+\Lambda^{-1}_{1,2} = \frac{m_2-n}{m_1m_2-n^2}$ and the charge of the quasiparticle w'_α is $\Lambda^{-1}_{2,2}+\Lambda^{-1}_{2,1} = \frac{m_1-n}{m_1m_2-n^2}$, where the electron charge is assumed to be -1 (the above results can be derived by using the Berry phase method [6] or the article by D.P. Arovas in Ref. [117]. however see also the next section).

3.3.2 Quasiparticle's spin in the non-polarized FQHE

Let us consider the special case $m_1 = m_2$ of the last subsection for simplicity. Then we have

$$e_i^* \cdot e_j^* = \frac{1}{m^2 - n^2} \begin{pmatrix} m & -n \\ -n & m \end{pmatrix} . \tag{3.57}$$

The wave function of the condensed quasiparticles in the singular gauge is a Laughlin type wave function, and according to Eq. (3.56), it shall be

$$\begin{aligned} \tilde{\Psi}_p^q = \quad & d(z'_\alpha - z'_\beta)^{e_1^* \cdot e_1^*} d(w'_\alpha - w'_\beta)^{e_2^* \cdot e_2^*} d(z'_\alpha - w'_\beta)^{e_1^* \cdot e_2^*} \\ & \times [d(z'_\alpha - z'_\beta) d(w'_\alpha - w'_\beta) d(z'_\alpha - w'_\beta)]^p . \end{aligned} \tag{3.58}$$

Hence the hierarchical wave function is

$$\Psi_{mmn,p} = \int \prod dv_\alpha \Psi_{mmn}(z_i, w_i, z'_\alpha, w'_\alpha) \Psi_p^q(z'_\alpha, w'_\alpha) , \tag{3.59}$$

where $\Psi_{mmn}(z_i, w_i, z'_\alpha, w'_\alpha)$ now is the normalized wave function given by Eq. (3.55) and dv_α are the rotationally invariant volume measures of the quasiparticles. By imposing the rotationally invariant condition on the wave function $\Psi_{mmn,p}$, we can obtain the relation

$$\begin{aligned} m(N_1 - 1) + nN_2 + N'_1 &= \phi , \\ nN_1 + m(N_2 - 1) + N'_2 &= \phi , \\ N_1 - p(N'_1 - 1) - pN'_2 &= 0 , \\ N_2 - p(N'_2 - 1) - pN'_1 &= 0 . \end{aligned} \tag{3.60}$$

The first two equations in Eq. (3.60) are equations in Eq. (3.54). From Eq. (3.60), we get the filling ν,

$$\nu = \frac{2}{m + n + \frac{1}{2p}} . \tag{3.61}$$

To discuss the Hamiltonian of the quasiparticles, we will use the quasiparticle wave function in non-singular gauge,

$$\begin{aligned} \Psi'_p = \quad & |d(z'_\alpha - z'_\beta)^{e_1^* \cdot e_1^*} d(w'_\alpha - w'_\beta)^{e_2^* \cdot e_2^*} d(z'_\alpha - w'_\beta)^{e_1^* \cdot e_2^*}| \\ & \times [\bar{d}(z'_\alpha - z'_\beta) \bar{d}(w'_\alpha - w'_\beta) \bar{d}(z'_\alpha - w'_\beta)]^p , \end{aligned} \tag{3.62}$$

The Hamiltonian which has Ψ'_p as the ground state is

$$H = \frac{2}{M}\sum (1+z'_i\bar{z}'_i)^2 (P_{\bar{z}'_i} - A_{\bar{z}'_i})(P_{z'_i} - A_{z'_i}) + (1+w'_i\bar{w}'_i)^2 (P_{\bar{w}'_i} - A_{\bar{w}'_i})(P_{w'_i} - A_{w'_i}), \tag{3.63}$$

where

$$A_{z'_i} = \frac{-im}{2(m^2-n^2)}\sum_{j\neq i}\frac{1}{z'_i - z'_j} + \frac{in}{2(m^2-n^2)}\sum_{i,j}\frac{1}{z'_i - w'_j} + \frac{i}{2}\frac{m(m-n-1)}{(m-n)(m+n)}\frac{\bar{z}'_i}{1+z'_i\bar{z}'_i} + \frac{i\phi}{2(m+n)}\frac{\bar{z}'_i}{1+z'_i\bar{z}'_i}, \tag{3.64}$$

and

$$A_{w'_i} = \frac{-im}{2(m^2-n^2)}\sum_{j\neq i}\frac{1}{w'_i - w'_j} + \frac{in}{2(m^2-n^2)}\sum_{i,j}\frac{1}{w'_i - z'_j} + \frac{i}{2}\frac{m(m-n-1)}{(m-n)(m+n)}\frac{\bar{w}'_i}{1+w'_i\bar{w}'_i} + \frac{i\phi}{2(m+n)}\frac{\bar{w}'_i}{1+w'_i\bar{w}'_i}. \tag{3.65}$$

we can check that, by using the relation (3.60) , $P_{z'_i} - A_{z'_i}$ or $P_{w'_i} - A_{w'_i}$ acting on the wave function Ψ'_p is zero.

We will follow exactly the same method to calculate the quasiparticle's spin as the polarized case (see the last section). The lagrangian of the quasiparticles is (for the case of disc geometry, see Ref. [126]),

$$L = \sum A_{z'_i}\frac{dz'_i}{dt} + A_{\bar{z}'_i}\frac{d\bar{z}'_i}{dt} + A_{w'_i}\frac{dw'_i}{dt} + A_{\bar{w}'_i}\frac{d\bar{w}'_i}{dt}. \tag{3.66}$$

From the lagrangian, we use Noether theorem to derive the angular momenta of the quasiparticle. Then from the angular momenta, we can get the spin of the quasiparticle. The first and second terms in the right of Eq. (3.64) and Eq. (3.65) tell us that the quasiparticles satisfy fractional statistics. The last terms in Eq. (3.64) and Eq. (3.65) represent the interaction between the quasiparticles and magnetic field (so the electric charge of the quasiparticle is $\frac{1}{m+n}$). The statistics parameters and the electric charge of the quasiparticle given by Eq. (3.64) and Eq. (3.65) are consistent with the ones given by the last section.

The spin of the particle will be changed by the presence of the magnetic monopole field or other particles with monopole charges[19]. For example, if a electron interacts with a magnetic monopole of odd integer flux, the spin of the electron will be an integer instead of $\frac{1}{2}$. The spin we would like to discuss is the intrinsic spin which shall not depend on the presence of the applied magnetic monopole field or other particles with monopole charges.

Let us consider the spin of quasiparticle z_i'. By calculating Noether currents of rotational invariance of the lagrangian (Ref. [78, 79] or the chapter 3 in Ref. [57]), we find that the terms in Eq. (3.66), for example, $\frac{-im}{2(m^2-n^2)}\frac{1}{z_i'-z_j'}\frac{dz_i'}{dt}$ and $\frac{in}{2(m^2-n^2)}\frac{1}{z_i'-w_j'}\frac{dz_i'}{dt}$ (and their complex conjugate) will contribute to spin of the quasiparticle. Also the interaction between the quasiparticle and magnetic field, which is described by the term in Eq. (3.66) as $\frac{i\phi}{2(m+n)}\frac{\bar{z}_i'}{1+z_i'\bar{z}_i'}\frac{dz_i'}{dt}$ (and its complex conjugate) will contribute to spin of the quasiparticle. However there is another term in Eq. (3.66), $\frac{i}{2}\frac{m(m-n-1)}{(m-n)(m+n)}\frac{\bar{z}_i'}{1+z_i'\bar{z}_i'}\frac{dz_i'}{dt}$ (and its complex conjugate), which represents the interaction between the quasiparticle and a monopole field with flux $\frac{m(m-n-1)}{(m-n)(m+n)}$. This term is independent on the presence of the applied magnetic monopole field or the presence of other quasiparticles. So its contribution to the spin of the quasiparticle is intrinsic. The contribution to the spin is $\frac{1}{2}\frac{m(m-n-1)}{(m-n)(m+n)}$. Thus we identify the intrinsic spin (from this time on, we will just simply call intrinsic spin as spin) of the quasiparticle as

$$s = \frac{m(m-n-1)}{2(m-n)(m+n)}. \tag{3.67}$$

This result can also be obtained by using the formula for S_{total} in Ref. [115].

When $m = 1, n = 0$, the up(down)-layer FQHE is an integer quantum Hall effect with the filling as 1. The quasiparticles are electrons or the holes of the electrons. From Eq. (3.67), s will be equal to zero when $m = 1, n = 0$. However one should expect that the electron spin is not 0, but $\frac{1}{2}$. What is the reason for the deficit of $\frac{1}{2}$? In the layered FQHE, the Pauli spin of the up(down)-layer electron is polarized as in the case of one layered FQHE. So only one component of the electron is taken into account and the Pauli spin $\frac{1}{2}$ usually is forgotten for this reason. The wave function of the electron in the up-layer is $\psi_{ui}(e)$ where

i is Pauli spin index ($i = 1, 2$). In the polarized case, one component is zero, for example, $\psi_{u2}(e) = 0$. The same reasoning shall also be applied to the quasiparticle wave function. The up-layer quasiparticle wave function is $\psi_{ui}(q)$. In the polarized case, $\psi_{u2}(q) = 0$. Thus We shall include the Pauli spin to the (intrinsic) spin of the quasiparticle and now the spin will be equal to $s^t = s + \frac{1}{2}$. This definition of the spin of the quasiparticle is consistent with the fact that the electron spin is $\frac{1}{2}$.

The generalized standard spin-statistics relation shall be

$$s^t = \frac{\theta}{2} + integer\,. \tag{3.68}$$

In the present problem, θ equals to $\frac{-m}{m^2-n^2}$ (θ corresponds to θ_{11} in the last section) and $s^t = s + \frac{1}{2}$ is given by Eq. (3.67) . However the relation (3.68) is not satisfied in this case.

When $m = n + 1$, the wave function Ψ_{mmn} satisfies the Fock cyclic condition (we will discuss it in the next section). Thus $\Psi_{n+1,n+1,n}$ can be used to describe the un-layered spin-singlet FQHE (SFQHE) [35]. When $m = n + 1$, s^t equals to $\frac{1}{2}$. However it is not clear to us that the definition of the quasiparticle spin by Eq. (3.68) is suitable for the quasiparticle spin in the spin-singlet FQHE or not.

3.3.3 Spin-singlet hierarchical wave function

For the FQHE with half spins reversed and without layered structure, all electrons are identical and the wave function needs to be anti-symmetrized. The wave function is [35]

$$\Phi_{mmn} = \sum_P \frac{(-1)^p}{(2N)!} \Psi_{mmn}(z_{P(1)}, \cdots, z_{P(N)}; z_{P(1+N)}, \cdots, z_{P(2N)}) \Psi_s(P)\,, \tag{3.69}$$

where $z_{i+N} = w_i$, P is permutation operator, p is the parity of the permutation P and $\Psi_s(P)$ is the spin function

$$\Psi_s(P) = (\alpha_{P(1)}, \cdots, \alpha_{P(N)}; \beta_{P(N+1)}, \cdots, \beta_{P(2N)})\,, \tag{3.70}$$

where α and β represent the spin-up and spin-down states. Φ_{mmn} is the eigenstate of $S^z = \sum_i^{2N} S_i^z = 0$. However it may not be the eigenstate of $S^2 = 0$ (if $S^2 = 0$, then S^z must be

zero). Now the operator of the rotation is given by

$$R^t(a,b,c,d) = R^s(a,b,c,d)R(a,b,c,d)\,, \tag{3.71}$$

where $R(a,b,c,d)$ is defined as that in Eq. (3.9) and $R^s(a,b,c,d)$ is the rotational operator on the spin function. Hence if the wave function (3.69) is rotationally invariant, that is $R^t\Phi_{mmn} = \Phi_{mmn}$, we may require

$$R\Phi_{mmn} = \Phi_{mmn}\,, R^s\Phi_{mmn} = \Phi_{mmn}\,. \tag{3.72}$$

The condition $R^s\Phi_{mmn} = \Phi_{mmn}$ is equal to the condition $S^2 = 0$. If we require $S^2\Psi_{mmn} = 0$, then we obtain the Fock cyclic condition (FCC) on the wave function [35] Ψ_{mmn}. FCC is a condition given by

$$E_{z_i}\Psi = \sum_j e(z_i, w_j)\Psi = \Psi\,, \tag{3.73}$$

where $e(z_i, w_j)$ is the operator which exchanges the coordinates z_i and w_j of the function. If $\Psi = \Psi_{mmn}$, then $m = n+1$ is the only solution of FCC. It is well-known fact that $\prod_{i<j}(z_i - z_j)(w_i - w_j)$ satisfies FCC, Eq. (3.73). Then we can easily show that $\prod_{i<j} d(z_i, z_j)d(w_i, w_j)$ satisfies FCC and so does $\Psi_{n+1,n+1,n}$. One interesting problem is how to construct the hierarchical wave function Φ on which S^2 is 0. We may first construct the hierarchical wave function Ψ based on the parent state $\Psi_{n+1,n+1,n}$ by using the construction discussed in the last subsection (now we must have $N_1 = N_1'$ in order to have a rotationally invariant state), then we wish that it fulfills FCC. We will show that it is indeed so! Following the last section, the general hierarchical wave function of $\Psi_{n+1,n+1,n}$ is

$$\begin{aligned}\Psi(z_i(1), w_i(1)) \;=\; & \int \prod dv_q \Psi_1(z_i(1), w_i(1); z_i(2), w_i(2)) \times \\ & \Psi_2(z_i(2), w_i(2); z_i(3), w_i(3)) \times \cdots \\ & \Psi_{l-1}(z_i(l-1), w_i(l-1); z_i(l), w_i(l))\Psi_l(z_i(l), w_i(l))\,.\end{aligned} \tag{3.74}$$

$z_i(1) = z_i$ ($w_i(1) = w_i$) are up(down) spin electron coordinates and $z_i(k)$ ($w_i(k)$) are up(down) spin quasiparticle coordinates of the kth hierarchy.

$\Psi_1(z_i(1), w_i(1); z_i(2), w_i(2))$ is the normalized electron wave functions in the presence of quasiparticles at $z_i(2)$, $w_i(2)$. $\Psi_k(z_i(k), w_i(k); z_i(k+1), w_i(k+1))$ is the normalized wave function of quasiparticles in the kth hierarchy in the presence of the next $((k+1)th)$ hierarchical quasiparticles. We mean that the quasiparticles in the second hierarchy is the quasiparticles of the electrons, etc.. The index in $z_i(k)$ $(w_i(k))$ ranges over $1 \leq i \leq N_k$ $(1 \leq i \leq N'_k)$. N_1 (N'_1) is the number of the up(down)-spin electrons and N_k (N'_k) is the number of the up(down)-spin quasiparticles in the kth hierarchy. The integration in Eq. (3.74) is over all quasiparticles coordinates (excluding the electron coordinates) and the integral measure over every quasiparticle coordinate is the rotationally invariant measure on the sphere (see the first section).

Let us define

$$
\begin{aligned}
F_k &= \prod_{i<j} d(z_i(k), z_j(k)) d(w_i(k), w_j(k)) \prod_{m,n} d(z_m(k), w_n(k)) \,, \\
G_k &= \prod_{i<j} d(z_i(k), z_j(k)) d(w_i(k), w_j(k)) \\
S_k &= \prod_{i,j} d(z_i(k), z_j(k+1)) d(w_i(k), w_j(k+1)) \,.
\end{aligned} \tag{3.75}
$$

Then the general hierarchical wave function Ψ in Eq. (3.74) is given by

$$
\begin{aligned}
&\Psi_1 = F_1^{p_1} G_1 S_1 (F_2)^{\frac{-p_1}{2p_1+1}} G_2 \,, \\
&\cdots\cdots \\
&\tilde{\Psi}_k = (F_k)^{s_k+p_k} G_k S_k (F_{k+1})^{\frac{-(s_k+p_k)}{2(s_k+p_k)+1}} G_{k+1} \,, \\
&\cdots\cdots \\
&\tilde{\Psi}_l = (F_l)^{s_l+p_l} G_l \,.
\end{aligned} \tag{3.76}
$$

$p_1 = n$, p_l with $l > 1$ are even integers and

$$
\tilde{\Psi}_k = \begin{cases} \Psi_k, & \text{if k=odd integer;} \\ \bar{\Psi}_k, & \text{otherwise.} \end{cases} \tag{3.77}
$$

s_k is given by the recursion relation

$$
s_{k+1} = -\frac{s_k + p_k}{2(s_k + p_k) + 1} \,, \tag{3.78}
$$

with $s_1 = 0$. The statistics parameter of the condensed quasiparticle in the kth hierarchy is

$$\theta_k = (-1)^{k-1}(s_k + 1)\,, \tag{3.79}$$

The charge of the condensed quasiparticle in the kth hierarchy is given by the recursion relation

$$e_{k+1} = -\frac{e_k}{2(s_k + p_k) + 1}\,, \tag{3.80}$$

with the electron charge $e_1 = -1$.

The wave function with l-hierarchies is characterized by the $2l \times 2l$ matrix Λ

$$\Lambda = \begin{pmatrix} I + p_1 C & I & 0 & \dots & 0 & 0 \\ I & -p_2 C & -I & 0 & \dots & 0 \\ 0 & -I & p_3 C & I & 0 & \dots \\ \vdots & \vdots & \ddots & \ddots & \vdots & \vdots \\ \vdots & \vdots & \ddots & \ddots & \vdots & \vdots \\ 0 & \dots & 0 & (-1)^{l-1} I & (-1)^{l-2} p_{l-1} C & (-1)^{l} I \\ 0 & 0 & \dots & 0 & (-1)^{l} I & (-1)^{(l-1)} p_l C \end{pmatrix}, \tag{3.81}$$

where p_i positive even integers (except p_1 can be zero) and I, C are matrices,

$$I = \begin{pmatrix} 1 & 0 \\ 0 & 1 \end{pmatrix}, C = \begin{pmatrix} 1 & 1 \\ 1 & 1 \end{pmatrix}. \tag{3.82}$$

In order that the wave function Φ be rotationally invariant, we apply the first condition in Eq. (3.72) and thus obtain the relation,

$$\sum_j \Lambda_{i,j}(H_j - \delta_{i,j}) = \begin{cases} \phi, & \text{if i=1,;} \\ 0 & \text{otherwise,} \end{cases} \tag{3.83}$$

where

$$H_{2i-1} = N_i, H_{2i} = N_i'\,. \tag{3.84}$$

It is clear that $N_k = N_k'$ in this case. From Eq. (3.83) we can derive filling as

$$\nu = \cfrac{2}{2p_1 + 1 + \cfrac{1}{2p_2 + \cfrac{1}{\cdots + \cfrac{1}{2p_l}}}}. \tag{3.85}$$

The second condition in Eq. (3.72) is equal to Fock cyclic condition (FCC) on Ψ. So we need to prove that the wave function (3.74) satisfies FCC. First we introduce the operators which are needed in the proving,

$$O_k = \prod_i^{N_k} \frac{(1+e(z_i(k),w_i(k)))}{2},$$
$$A_k^1 f(z_i(k)) = \sum_P \frac{(-1)^p}{N_k!} f(z_{Pi}(k)),$$
$$A_k^2 f(w_i(k)) = \sum_P \frac{(-1)^p}{N_k!} f(w_{Pi}(k)). \tag{3.86}$$

where P are the permutations on $1,2,\ldots,N_k$. Let us consider the simplest hierarchical wave function ($l=2$). The wave function is now

$$\Psi = \int \prod dv_q F_1^{p_1} G_1 S_1 (F_2)^{\frac{-p_1}{2p_1+1}} G_2 (\bar{F}_2)^{\frac{-p_1}{2p_1+1}+p_2} \bar{G}_2 . \tag{3.87}$$

G_1 satisfies Eq. (3.73). As an **important** fact, we can prove $G_1 O_2(S_1 G_2)$ also satisfies FCC or Eq. (3.73)

$$E_{z_i}(G_1 O_2(S_1 G_2)) = G_1 O_2(S_1 G_2). \tag{3.88}$$

Eq. (3.88) is valid because

$$\begin{aligned}
&\prod_{i<j}(z_i(1)-z_j(1))(w_i(1)-w_j(1)) \times \\
&O_2[\prod_{i,j}(z_i(1)-z_j(2))(w_i(1)-w_j(2)) \times \\
&\prod_{i<j}(z_i(2)-z_j(2))(w_i(2)-w_j(2))]
\end{aligned} \tag{3.89}$$

satisfies FCC. Now we shall show that

$$\int \prod dv_q F_1^{p_1} |(F_2)|^{\frac{-2p_1}{2p_1+1}} (\bar{F}_2)^{p_2} G_1 O_2(S_1 G_2) \bar{G}_2 \tag{3.90}$$

is proportional to the wave function Ψ in Eq. (3.87). Because

$$F_1^{p_1} |(F_2)|^{\frac{-2p_1}{2p_1+1}} (\bar{F}_2)^{p_2} \tag{3.91}$$

is the completely symmetric function of the coordinates $z_i(2), w_i(2)$, the operator O_2 acting on the function $S_1 G_2$ can be removed to act on the function $\bar{G}_2$ inside the integration. So

Eq. (3.90) is equal to

$$\int \prod dv_q {F_1}^{p_1} |(F_2)|^{\frac{-2p_1}{2p_1+1}} (\bar{F}_2)^{p_2} G_1 S_1 G_2 (O_2 \bar{G}_2) \,. \tag{3.92}$$

But G_2 is the anti-symmetric function of the coordinates $z_i(2)$ and the anti-symmetric function of the coordinates $w_i(2)$, hence Eq. (3.92) will be equal to

$$\int \prod dv_q {F_1}^{p_1} |(F_2)|^{\frac{-2p_1}{2p_1+1}} (\bar{F}_2)^{p_2} G_1 S_1 G_2 (A_2^1 A_2^2 O_2) \bar{G}_2 \,. \tag{3.93}$$

It can be shown that

$$(A_2^1 A_2^2 O_2) \bar{G}_2 \tag{3.94}$$

is proportional to $\bar{G}_2$. Hence we can conclude that Eq. (3.90) is proportional to Ψ in Eq. (3.87). But Eq. (3.90) satisfies FCC due to the identity (3.88) , so the wave function (3.87) also satisfies FCC. For the case of the general hierarchical wave function, we leave the proving to the next section. We shall mention that, Moore and Read had discussed the Halperin spin-singlet state from the point of view of the conformal field theory [85]. They had also discussed ordinary spin polarized hierarchical wave function by using the conformal field theory. It will be interesting to see how to obtain the above spin-singlet hierarchical wave function by using the method developed in Ref. [85].

3.3.4 Paring picture of the hierarchical wave function

The last subsection gives us an impression that we obtain the hierarchical wave function (3.74) satisfying FCC only by guess . In fact, we did not get the wave function (3.74) directly during this work. In this section, we shall show our original reasoning (based on the physical intuition) which we used to obtain the hierarchical wave function. The picture presented in the following may be not right, but the final wave function obtained in this picture is the same as that in the last subsection and we think that it is worthwhile to include it here. The picture presented in this subsection shall be called as pairing picture. The pairing picture had firstly and extensively been used by the authors in Ref. [85] to construct the spin-singlet state in the FQHE, for example, Halperin spin-singlet state, Haldane and Rezayi spin-singlet

state. Pfaffian state at a filling factor $\frac{1}{q}$ with q as even integer was also obtained based on pairing picture [85].

If the wave function Ψ_{p_1+1,p_1+1,p_1} in the presence of quasiparticles is

$$\Psi_1^p = F_1^{p_1}(F_2)^{\frac{-p_1}{2p_1+1}} G_1 O_2(S_1 G_2)\,, \tag{3.95}$$

then it will satisfy FCC (3.73) because $G_1 O_2(S_1 G_2)$ satisfies FCC. From the wave function Ψ_1^p, we shall suppose that the Laughlin wave function of the quasiparticles is

$$\Psi_2^p = (\bar{F}_2)^{\frac{-p_1}{2p_1+1}+p_2} O_2(\bar{G}_2)\,. \tag{3.96}$$

It is reasonable to assume that the spin function of the quasiparticles is

$$\prod \frac{(\alpha_{z_i(2)}\beta_{w_i(2)} - \alpha_{w_i(2)}\beta_{z_i(2)})}{\sqrt{2}}\,. \tag{3.97}$$

The spin function of the quasiparticles given by Eq. (3.97) will insure that the excited state is the eigenstate of S^2 with the eigenvalue being 0. The excitations of the Laughlin states look like *Skyrmion* excitations. The Skyrmion excitation is specified by the coordinates $z_i(2)$ and $w_i(2)$, and it is a bound state of the Laughlin quasiparticles at $z_i(2)$ and $w_i(2)$. This bound state looks like Cooper pair in superconductivity. We can demonstrate this point more clearly if we write the wave function of the quasiparticles as

$$\Psi_2' = |F|_2^{\frac{-p_1}{2p_1+1}} \bar{F}^{p_2} O_2(\bar{G}_2)\,, \tag{3.98}$$

which is related to the wave function in (3.96) by a singular gauge transformation. In the new wave function of the quasiparticles (the wave function now is the spin function (3.97) multiplied by the wave function (3.98)), when $z_i(2)$ exchanges with $w_i(2)$, we shall get a minus sign and when exchange the coordinates $z_i(2)$ and $w_i(2)$ with the coordinates $z_j(2)$ and $w_j(2)$, the sign of the wave function remains unchanged. So in this gauge, the quasiparticle is fermion and the bound state is boson. Thus it exactly looks likes the case of Cooper pairs in superconductivity.

We can proceed to construct the next hierarchy in a similar way. The quasiparticles in any hierarchy all are bounded to pairs. Then the general hierarchical wave function is

$$\Psi^p = \int \prod dv_q \Psi_1^p \Psi_2^p \cdots \Psi_l^p , \tag{3.99}$$

with

$$\begin{aligned}
&\Psi_1^p = F_1^{p_1} G_1 (F_2)^{\frac{-p_1}{2p_1+1}} O_2(S_1 G_2) , \\
&\cdots\cdots , \\
&\tilde{\Psi}_k^p = (F_k)^{s_k+p_k} (F_{k+1})^{\frac{-(s_k+p_k)}{2(s_k+p_k)+1}} (O_k O_{k+1})(G_k S_k G_{k+1}) , \\
&\cdots\cdots , \\
&\tilde{\Psi}_l^p = (F_l)^{s_l+p_l} O_l(G_l) .
\end{aligned} \tag{3.100}$$

Because Ψ_1^p satisfies FCC, it is clear that Ψ^p shall satisfy FCC.

We surprisingly find that Ψ^p is proportional to Ψ in Eq. (3.74). Take the simplest case, $l = 2$, the proving of the above statement is rather easy. The wave function Ψ^p is then

$$\begin{aligned}
\Psi^p \;=\; & \int \prod dv_q (\textit{symmetric function of } z_i(2), w_i(2)) \\
& O_2(S_1 G_2) O_2(\bar{G}_2) ,
\end{aligned} \tag{3.101}$$

where $\textit{symmetric function of } z_i(2), w_i(2) \;=\; {F_1}^{p_1} |(F_2)|^{\frac{-2p_1}{2p_1+1}} (\bar{F}_2)^{p_2}$. Inside the integration, $O_2(S_1 G_2) O_2(\bar{G}_2)$ can be changed to

$$(S_1 G_2)(O_2 O_2)(\bar{G}_2) = (S_1 G_2) O_2(\bar{G}_2)$$

due to $O_k O_k = O_k$. The remaining proving can be found in the last section. For the general case, we take $l = 3$ as an example. The wave function is now

$$\begin{aligned}
\Psi^p = \quad & \int \prod dv_q (\textit{symmetric function of } z_i(2), w_i(2)) \\
& \times (\textit{symmetric function of } z_i(3), w_i(3)) \\
& \times O_2(S_1 G_2)(O_2 O_3)(\bar{G}_2 \bar{S}_2 \bar{G}_3) O_3(G_3) .
\end{aligned} \tag{3.102}$$

Inside the integration, we can change

$$O_2(S_1G_2)(O_2O_3)(\bar{G}_2S_2G_3)O_3(G_3) \tag{3.103}$$

to

$$(S_1G_2)(O_2(O_2O_3))(\bar{G}_2\bar{S}_2\bar{G}_3)O_3(G_3) \tag{3.104}$$

which is equal to

$$S_1G_2(O_2O_3)(\bar{G}_2\bar{S}_2\bar{G}_3)O_3(G_3)\,. \tag{3.105}$$

However because S_1G_2 is the anti-symmetric function of the coordinates $z_i(1)$ and the anti-symmetric function of the coordinates $w_i(1)$, so Eq. (3.105) is equal to

$$S_1G_2(A_2^1A_2^2O_2O_3)(\bar{G}_2\bar{S}_2\bar{G}_3)O_3(G_3)\,. \tag{3.106}$$

It can be shown that $A_2^1A_2^2O_2O_3(\bar{G}_2\bar{S}_2\bar{G}_3)$ is proportional to $\bar{G}_2O_3(\bar{S}_2\bar{G}_3)$. So Eq. (3.106) is proportional to

$$S_1G_2\bar{G}_2O_3(\bar{S}_2\bar{G}_3)O_3(G_3)\,. \tag{3.107}$$

Using the same reasoning as the one between Eq. (3.102) and Eq. (3.102) , one can show that Eq. (3.107) inside the integration can be replaced by

$$S_1G_2\bar{G}_2\bar{S}_2\bar{G}_3((O_3O_3)(G_3)) = S_1G_2\bar{G}_2\bar{S}_2\bar{G}_3O_3(G_3)\,. \tag{3.108}$$

Because $\bar{S}_2\bar{G}_3$ is the anti-symmetric function of the coordinates $z_i(3)$ and the anti-symmetric function of the coordinates $w_i(3)$, Eq. (3.108) turns out to be equal to

$$S_1G_2\bar{G}_2\bar{S}_2\bar{G}_3O_3O_3(G_3) = S_1G_2\bar{G}_2\bar{S}_2\bar{G}_3A_3^1A_3^2O_3(G_3)\,. \tag{3.109}$$

Due to $A_3^1A_3^2O_3(G_3)$ being proportional to G_3, so Eq. (3.109) is proportional to

$$S_1G_2\bar{G}_2\bar{S}_2\bar{G}_3G_3\,. \tag{3.110}$$

Thus we finally conclude that Ψ^p is proportional to the corresponding Ψ in the last subsection when $l = 3$. Actually they are the same wave functions. So Ψ given by Eq. (3.74) also satisfies FCC. If $l > 3$, the proving can follow the same way as that we did in the case of $l = 3$.

Let us now give a summarization of the current section. We have constructed the wave function Ψ^p which satisfies FCC. We have also proven that the wave function Ψ and Ψ^p are actually the same wave functions. Thus automatically we show that the hierarchical wave function Ψ in the last subsection satisfies FCC.

In summary of this section, we have constructed the hierarchical wave function of the SFQHE which satisfies FCC. We have discussed the spin of the quasiparticles and the spin-statistics relation in some cases. The hierarchical state of the SFQHE has also been discussed in Ref. [94]. The relation between Ref. [94] and this work is not clear. There are some other approaches to the non-polarized FQHE, for example, the effective Ginzburg-Landau theory approach [75, 31]. Although the Ginzburg-Landau theory of the spin-polarized FQHE has been well developed (Ref. [14, 34, 125, 92, 113],etc. and also the review articles Ref. [57, 123]), the Ginzburg-Landau theory of the SFQHE has not been much studied in the literature. While we know how to implement the rotational invariance condition on the wave function of the SFQHE (on the sphere), we do not know how to fully implement the rotational invariance condition in the effective Ginzburg-Landau theory. In the microscopic approach to the SFQHE, the rotational invariance condition on the spin sector of the wave function turns out to be Fock cyclic condition on the wave function. The rotational invariance condition on the space sector will give us a set of relations from which we can derive the filling of the state. But how can we apply the rotational invariance correctly and sufficiently on the corresponding Ginzburg-Landau theory? We can also obtain the wave function of the SFQHE on the torus (the wave function of the spin-polarized FQHE on the torus, which has the filling as $\frac{1}{m}$ with m being an odd integer, has been constructed in Ref. [40] and the hierarchical wave function on the torus has been constructed in Refs. [80, 81] (see also the next chapter). Although the rotational invariance is broken for the space part of the wave function (we have another important invariance on the torus, that is translational invariance), we can still require that the wave function is the eigenstate of S^2 with the eigenvalue as 0. $\theta_a(\sum_i z_i)\theta_a(\sum_i w_i)\prod_{i<j}\theta_3(z_i-z_j)\theta_3(w_i-w_j)$ is a solution to FCC and so it can be used to

construct the wave function on the torus. we need to use Fay' trisecant identity [86] to prove this Fock cyclic identity on the torus. θ_a with $a = 1, 2, 3, 4$ are the θ functions on the torus, in which θ_3 is the odd function [86].

3.4 Particle-hole conjugation in the FQHE

3.4.1 Spin-polarized case

Let us recall the particle-hole conjugation in the spin-polarized (un-layered) FQHE. If there is a state of the FQHE with the filling $\nu = \frac{1}{m}$, then the filling of the conjugated state is $\nu^c = 1 - \frac{1}{m}$. The vacuum state of the FQHE is defined as there are no electrons in the lowest Landau level. So the conjugate vacuum Ω is the state filled with every orbital in the lowest Landau level occupied [32, 72],

$$\Omega(z_1, z_2, \cdots, z_{\phi+1}) = \prod_{i<j}^{\phi+1} d(z_i, z_j)\,, \tag{3.111}$$

where ϕ is the magnetic flux and $\phi + 1$ is the number of the orbital in the lowest Landau level. If there is a state $\Psi(z_1, z_2, \cdots, z_N)$, then the corresponding conjugate state is

$$\Psi_C = \int dv_1 \cdots dv_N \Omega(z_1, z_2, \cdots, z_{\phi+1}) \Psi^*(z_1, z_2, \cdots, z_N)\,. \tag{3.112}$$

The Laughlin wave function of the FQHE state with the filling $\frac{1}{m}$ is

$$\Psi(z_1, z_2, \cdots, z_N) = \prod_{i<j}^{N} d^m(z_i, z_j),$$

where we have the relation $m(N-1) = \phi$. Thus the conjugate state is

$$\begin{aligned}
\Psi_C &= \int dv_1 \cdots dv_N \prod_{i<j}^{\phi+1} d(z_i, z_j) \prod_{i<j}^{N} \bar{d}^m(z_i, z_j) \\
&= \int dv_1 \cdots dv_N \prod_{N+1 \le i < j \le \phi+1} d(z_i, z_j) \\
&\quad \prod_{N+1 \le i \le \phi+1, 1 \le i \le N} d(z_i, z_j) \times \\
&\quad \prod_{1 \le i \le N} |d(z_i, z_j)|^2 \bar{d}^{m-1}(z_i, z_j)\,,
\end{aligned} \tag{3.113}$$

The filling of this state is

$$\nu = 1 - \frac{1}{m} = \frac{1}{1 + \dfrac{1}{m-1}}, \tag{3.114}$$

and the wave function (3.113) actually also belongs to the hierarchical wave function [48, 14, 78, 79]. We can show that, by using the conjugation operation, the conjugate state of the hierarchical wave function, of which the filling is

$$\nu = \cfrac{1}{p_1 + \cfrac{1}{p_2 + \cfrac{1}{\cdots + \cfrac{1}{p_l}}}},$$

is given by another hierarchical state with the filling as

$$\nu_c = 1 - \nu = \cfrac{1}{1 + \cfrac{1}{p_1 - 1 + \cfrac{1}{\cdots + \cfrac{1}{p_l}}}}. \tag{3.115}$$

3.4.2 Spin-nonpolarized case

We will only consider the spin-singlet state. The conjugate vacuum state of the spin-singlet state Ω_s now is

$$\Omega_s = \Phi_{1,1,0}(z_1, z_2, \cdots, z_{\phi+1}; w_1, w_2, \cdots, w_{\phi+1}). \tag{3.116}$$

The conjugate state of $\Phi_{n+1,n+1,n}(z_1, z_2, \cdots, z_N; w_1, w_2, \cdots, w_N)$ is

$$\Phi_c = \int \prod_{1 \le i \le N} dv_{z_i} dv_{w_i} \Phi^{\dagger}_{n+1,n+1,n} \Omega_s \tag{3.117}$$

The filling of the state Φ_c is $2 - \frac{2}{2n+1} = \frac{2}{1+\frac{1}{2n}}$, and by explicit calculation, Φ_c turns out to be the hierarchical state with $l = 2, p_1 = 0, p_2 = n$. Generally, the conjugate wave function of the hierarchical wave function specified by the parameters $(p_1, p_2, \cdots, p_l)$ is the hierarchical wave function specified by the parameters $(p'_1, p'_2, \cdots, p'_{l+1}) = (0, p_1, p_2, \cdots, p_l)$. The summation of the fillings of two states, which are conjugate with each other, is always equal to 2. The

above discussion offers some kinds of checking to the hierarchical wave function constructed previously. We finally remark that when $p_1 = 0, p_2 = 2, l = 2$, the filling is $\frac{8}{5}$, and this state is conjugate to the state specified by the parameters $p_1 = 2, l = 1$ with the filling as $\frac{2}{5}$.

4 Hierarchical wave function on the torus

We will construct hierarchical wave functions of the FQHE on the torus in this chapter [80, 81]. We first construct the Halperin hierarchy on the torus. The multi-component nature of anyon wave functions and the degeneracy of the FQHE on the torus are very clear reflected in this kind of wave functions. We also calculate the braid statistics of the quasiparticles of the Laughlin state in the FQHE on the torus and show they fit to the picture of anyons interacting with the magnetic field on the torus obtained from the braid group analysis. Then we construct Read's hierarchical wave function on the torus. The degeneracy of the wave functions are also discussed. We note that Ref. [63] has studied similar problems.

4.1 Laughlin's wave functions on the torus

It is of great interest to see that how the FQHE is realized on the surfaces of different topologies. The FQHE on the torus is particular interesting because the torus provides the simplest example of surfaces with a nontrivial topology. Recently it has been emphasized that a new kind of order called topological order which appears in the FQHE (Hall fluid), the chiral spin fluid and the anyon superfluid[112]. The FQHE on the torus at filling $\frac{1}{m}$ with m being an integer has a m-fold center-mass degeneracy[102, 40, 41], This degeneracy actually is a manifestation of the topological order. Topological order describes the global properties of the ground state which depend on the topology of the surface and its low lying excitations. The field theory of such kind system is controlled by the topological field theory, the Chern-Simons theory , which is particularly relevant in the application to the condensed

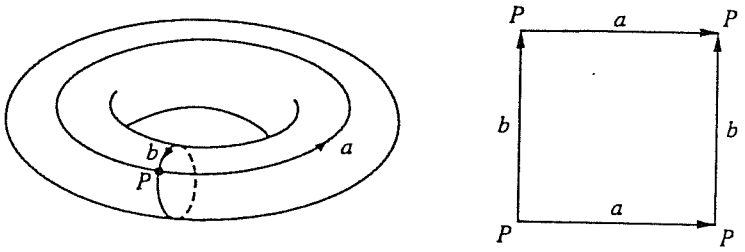

Figure 4.1: A torus.

matter systems. The relation of the Chern-Simons theory to the FQHE has been investigated in Refs. [125, 92, 57], etc..

The Laughlin wave function (see Ref. [69]) on the torus was obtained in Ref. [41]. In this section, the notations used in the following sections are summarized and some results in Ref. [40] are brief reviewed.

Following Refs. [40], we consider a magnetic field with potential $\mathbf{A} = -By\hat{\mathrm{x}}$, the wave function describing an electron in the lowest Landau level has the form

$$\psi(x,y) = e^{-\frac{By^2}{2}} f(z)\,, \tag{4.1}$$

where $f(z)$ is the holomorphic function, and the units $e = 1\,, \hbar = 1$ are used. The lagrangian of the electron in the magnetic field is

$$L = \sum_{i=1,2} \frac{1}{2} m (v^i)^2 + A^i v^i\,, \tag{4.2}$$

where L is invariant up to a total time derivative under the translations. The corresponding Noether currents due to the translations are

$$t_x = m\dot{x} - By\,, t_y = m\dot{y} + Bx\,. \tag{4.3}$$

The conjugate momenta are (see also a brief discussion in chapter 2)

$$p_x = m\dot{x} - By\,, p_y = m\dot{y}\,. \tag{4.4}$$

So

$$t_x = p_x\,, t_y = p_y + Bx\,. \tag{4.5}$$

They commute with Hamiltonian

$$H = \frac{1}{2m}[(p_x + By)^2 + (p_y)^2]\,, \tag{4.6}$$

with the commutations $[x\,, p_x] = i\,, [y\,, p_y] = i$ when the theory is quantized. we work on a torus by identifying $z \sim z + m + n\tau$ with $\tau = \tau_1 + i\tau_2$ and $\tau_2 \geq 0$. The consistent boundary conditions imposed on the wave function of the electron on this torus are

$$e^{it_x}\psi = e^{i\phi_1}\psi\,, e^{i\tau_1 t_x + i\tau_2 t_y}\psi = e^{i\phi_2}\psi\,, \tag{4.7}$$

with the condition $\tau_2 B = 2\pi\Phi$, where Φ is an integer, which will insure that $e^{it_x}, e^{i\tau_1 t_x + i\tau_2 t_y}$ commute with each other for the consistence of Eq. 4.7. By using the relation

$$e^{i\tau_1 t_x + i\tau_2 t_y} = e^{\frac{-i\tau_2 Bx^2}{2\tau_1}} e^{i\tau_1 p_x + i\tau_2 p_y} e^{\frac{i\tau_2 Bx^2}{2\tau_1}}\,, \tag{4.8}$$

Eq. (4.7) can be written as

$$f(z+1) = e^{i\phi_1} f(z)\,, f(z+\tau) = e^{i\phi_2} e^{-i\pi\Phi(2z+\tau)} f(z)\,. \tag{4.9}$$

For the many-particle wave functions, the condition of Eq. (4.9) is imposed on every particle.

The standard θ function is defined as

$$\theta(z|\tau) = \sum_n \exp(\pi i n^2\tau + 2\pi i n z)\,, n \subset \textit{integer}\,. \tag{4.10}$$

More generally, the θ function on the lattice is [22]

$$\theta(z|e,\tau) = \sum_{n_i} \exp(\pi i v^2\tau + 2\pi i v\cdot z)\,, \tag{4.11}$$

where v is a vector on a *l-dimension* lattice, $v = \sum_{i=1}^{l} n_i e_i$, with n_i being integers, $e_i \cdot e_j = A_{ij}$ and $z = z_i e_i$. The θ function in Eq. (4.10) is a special case of the θ function defined by Eq. (4.11) with $l = 1, e_1 \cdot e_1 = 1$. Furthermore we define

$$\theta\begin{bmatrix} a \\ b \end{bmatrix}(z|e,\tau) = \sum_{n_i} \exp(\pi i(v+a)^2\tau + 2\pi i(v+a)\cdot(z+b)), \tag{4.12}$$

where a, b are arbitrary vectors on the lattice. Only the positive matrix A will be considered, which mean that $x_i A_{ij} x_j$ always is greater than zero when $x_i \neq 0$. This requirement will insure that the θ function in Eq. (4.11) is well defined. The dual lattice e_i^* is defined as

$$e_i^* \cdot e_j = \delta_{ij}, \tag{4.13}$$

then we have $e_i^* \cdot e_j^* = A_{i,j}^{-1}$. It can be verified that

$$\begin{aligned}
&\theta\begin{bmatrix} a \\ b \end{bmatrix}(z+e_i|e,\tau) = e^{2\pi i a\cdot e_i}\theta\begin{bmatrix} a \\ b \end{bmatrix}(z|e,\tau), \\
&\theta\begin{bmatrix} a \\ b \end{bmatrix}(z+\tau e_i|e,\tau) = \exp[-\pi i\tau e_i^2 - 2\pi i e_i\cdot(z+b)]\theta\begin{bmatrix} a \\ b \end{bmatrix}(z|e,\tau), \\
&\theta\begin{bmatrix} a \\ b \end{bmatrix}(z+e_i^*|e,\tau) = e^{2\pi i a\cdot e_i^*}\theta\begin{bmatrix} a \\ b \end{bmatrix}(z|e,\tau), \\
&\theta\begin{bmatrix} a \\ b \end{bmatrix}(z+\tau e_i^*|e,\tau) = \exp[-\pi i\tau (e_i^*)^2 - 2\pi i e_i^*\cdot(z+b)]\theta\begin{bmatrix} a+e_i^* \\ b \end{bmatrix}(z|e,\tau),
\end{aligned} \tag{4.14}$$

and

$$\theta\begin{bmatrix} a+e_i \\ b+e_j^* \end{bmatrix}(z|e,\tau) = \exp(2\pi i a\cdot e_j^*)\theta\begin{bmatrix} a \\ b \end{bmatrix}(z|e,\tau). \tag{4.15}$$

In a *1-dimension* lattice with $e_1 \cdot e_1 = 1$, the θ function is the one defined in Eq. (4.10). Moreover

$$\theta_3(z|\tau) = \theta\begin{bmatrix} \frac{1}{2} \\ \frac{1}{2} \end{bmatrix}(z|\tau), \tag{4.16}$$

is an odd function of z. And we have equations

$$\begin{aligned}
&\theta_3(z+1|\tau) = e^{\pi i}\theta_3(z|\tau), \\
&\theta_3(z+\tau|\tau) = \exp[-\pi i\tau - 2\pi i\cdot(z+\frac{1}{2})]\theta_3(z|\tau).
\end{aligned} \tag{4.17}$$

The Laughlin-Jastrow wave functions on the torus at the filling $\frac{1}{m}$ (m is an odd positive integer) can be written as

$$\Psi(z_i) = \exp(-\frac{\pi\Phi\sum_i y_i^2}{\tau_2})F(z_i)\,,$$
$$F(z_i) = \theta\begin{bmatrix}a\\ b\end{bmatrix}(\sum_i z_i e|e,\tau)\prod_{i<j}[\theta_3(z_i - z_j|\tau)]^m\,, \tag{4.18}$$

where θ function is on a *1-dimension* lattice, $e^2 = m$, $i = 1, 2\ldots, N$ with N being the number of the electrons and $a = a^*e^*, b = b^*e^*$. Thus

$$F(z_i + 1) = (-1)^{N-1}e^{2\pi a^*}F(z_i)\,,$$
$$F(z_i + \tau) = \exp(-\pi(N-1) - 2\pi i b^*)\exp[-i\pi mN(2z_i + \tau)]F(z_i)\,. \tag{4.19}$$

Compared to Eq. (4.9), we get

$$\Phi = mN, \phi_1 = \pi(\Phi + 1) + 2\pi n_1 + 2\pi a^*, \phi_2 = \pi(\Phi + 1) + 2\pi n_2 - 2\pi b^*\,. \tag{4.20}$$

Eq. (4.20) has solutions

$$a_i^* = a_0 + i,\ , b^* = b_0\ , i = 0, 1, \ldots, m-1\,,$$
$$a_0 = \frac{\phi_1}{2\pi} + \frac{\Phi+1}{2}\ , b_0 = -\frac{\phi_2}{2\pi} + \frac{\Phi+1}{2}\,, \tag{4.21}$$

which will give m orthogonal Laughlin-Jastrow wave functions (other solutions are not independent on the solutions given by Eq. (4.21), which can be seen from Eq. (4.15)). So there is a m-fold center-mass degeneracy[40, 41, 104].

We give a remark here. Different ground states are connected by gauge transformation of the magnetic field[57, 55]. The degeneracy will disappear and one unique ground state appears by fixing the gauge of the magnetic field. Let us use the above Laughlin wave functions as an example. Now we take the magnetic potential as $A_1 = (-By + \frac{2\pi c_1}{\tau_2})\hat{\mathrm{x}}$, $A_2 = \frac{2\pi c_2}{\tau_2}\hat{\mathrm{y}}$ with c_1, c_2 being constant and $c = ic_1 - c_2$. The c field in the magnetic potential A is corresponding to the magnetic flux around two handles of the torus [87, 102]. The magnetic field is independent on constants c_i. c_i can be any constant numbers and the choice of c_i is the choice of the gauge

of the magnetic potential. c and $c+m+n$ are gauge equivalent as they are connected by the *large gauge* transformations on the torus which are generated by $U_1 = \exp(\frac{-2\pi iy}{\tau_2})$ and $U_2 = \exp[\frac{\pi(\tau\bar{z}-\bar{\tau}z)}{\tau_2}]$. Physically, it means that the system is gauge equivalent with another system which are obtained by adding the integer flux to the previous one around two handles. If we take $A_1 = (-By + \frac{2\pi c_1}{\tau_2})\hat{\mathrm{x}}$, $A_2 = \frac{2\pi c_2}{\tau_2}\hat{\mathrm{y}}$, the wave functions will be

$$\begin{aligned}
\Psi(z_i) &= \exp(\frac{\pi}{2\tau_2}[ce^* + \sum_i(\bar{z}_i - z_i)e]^2) \\
&\quad \times \exp(-\frac{\pi\Phi\sum_i y_i^2}{\tau_2} - \frac{\pi}{2\tau_2}[\sum_i(\bar{z}_i - z_i)e]^2)F(z_i)\,, \\
F(z_i) &= \theta\begin{bmatrix}a\\ b\end{bmatrix}(\sum_i z_i e - ce^*|e,\tau)\prod_{i<j}[\theta_3(z_i - z_j|\tau)]^m\,, \qquad (4.22)
\end{aligned}$$

where $e^* = \frac{1}{e}$ and a, b are remain unchanged and still given by Eq. (4.21). Then we find that the above wave functions will be invariant up to a phase under the related *large gauge* transformation of U_1 and will change from one to another under the related *large gauge* transformation of U_2. So we can say that the degeneracy will disappear by fixing the gauge of the magnetic field. The definition of the large gauge transformation on the wave functions can be found in Ref. [55] or formula (4.72) in Ref. [57] (but pay attention on the different notations;see also Ref. [81] and following sections for a related discussion).

In Refs. [57, 55], they also show that the phases ϕ_1 , ϕ_2 need to be fixed if requiring that the wave function under the modular transformations will be transformed covariantly.

4.2 Halperin's hierarchical wave function on the torus

The hierarchical FQHE in Ref. [48] describes an hierarchical condensation of quasiparticles of the parent states. Refs. [71, 72, 14] had studied this hierarchical wave function in details. To construct this kind of wave function, we need the wave functions of the condensed quasiparticles in different hierarchies. Those wave functions turn out to be multi-component on the torus. We shall construct such kind of wave functions on the torus and see what is the degeneracy of the wave functions. The FQHE at hierarchical filling on the torus also has been investigated in Refs. [57, 55] in the context of the Chern-Simons theory.

4.2.1 An example

Following the last chapter, the hierarchical state can be characterized by matrix Λ,

$$\Lambda = \begin{pmatrix} p_1 & +1 & 0 & \dots & 0 & 0 \\ +1 & -p_2 & -1 & 0 & \dots & 0 \\ 0 & -1 & p_3 & +1 & 0 & \dots \\ \vdots & \vdots & \ddots & \ddots & \vdots & \vdots \\ \vdots & \vdots & \ddots & \ddots & \vdots & \vdots \\ 0 & \dots & 0 & (-1)^{n-1} & (-1)^n p_{n-1} & (-1)^n \\ 0 & 0 & \dots & 0 & (-1)^n & (-1)^{n+1} p_n \end{pmatrix}, \tag{4.23}$$

where p_1 is a positive integer (in the following discussion, we will show that $p_i, i = 2, 3, \dots, n$ shall be positive even integers if we require that the wave function is well defined on the torus). Λ describes a *n-level* hierarchical state. The coordinates of the particles are expressed by $z_{s,i}$. $z_{s,i}$ is the coordinate of the *ith* particle in level s, for example, $z_{1,i} = z_i$ is the coordinate of the *ith* electron. We take a simple example, $n = 2$ hierarchical state, to demonstrate how to construct the hierarchical wave function. In this case, the wave function is supposed to be

$$\Psi(z_i) = \int \prod_{\alpha} dv_{2,\alpha} \sum_{l=0}^{p_1-1} \Psi_1(z_i, z_{2,\alpha})_l \Psi_2(z_{2,\alpha})_l \,, \tag{4.24}$$

where $dv_{2,\alpha} = dz_{2,\alpha} d\bar{z}_{2,\alpha}$ which are integrated on the torus. $\Psi_1(z_i, z_{2,\alpha})_l$ in Eq. (4.24) are the Laughlin wave functions of electrons in the presence of the quasiparticles with the coordinates $z_{2,\alpha}$ and $\Psi_2(z_{2,\alpha})_l$ is the Laughlin type wave function of the quasiparticles. The index l in Ψ_1 is the degeneracy index of the Laughlin wave functions with filling at $\frac{1}{p_1}$. However the index l of Ψ_2 is the component index of the quasiparticle wave function and it reflects the multi-component nature of anyon wave functions on the torus. In Ref. [24], it is found that free anyons have a multicomponent wave function on the torus by using the braid group analysis. However even when anyons are exposed to the magnetic field (the quasiparticles in the FQHE interact with the magnetic field), by generalizing the results of Ref. [24] to the case of anyons interacting with a magnetic field, the wave function is still found to be multicomponent (see the following sections).

The wave functions Ψ_1 are the Laughlin wave function with N_2 quasiparticles. Now we

have the relation $p_1 N_1 + N_2 = \Phi$ and the wave functions are given by

$$\begin{aligned}
\Psi_1(z_i, z_{2,\alpha})_l &= \exp(-\frac{\pi\Phi(\sum_i y_i^2 + \frac{1}{p_1}\sum_\alpha y_{2,\alpha}^2)}{\tau_2})F_1(z_i)_l\,, \\
F_1(z_i)_l &= \theta\begin{bmatrix} a_l \\ b \end{bmatrix}(\sum_i z_i e + \sum_\alpha z_{2,\alpha} e^* | e, \tau)\prod_{i<j}[\theta_3(z_i - z_j|\tau)]^{p_1} \\
&\quad \times \prod_{i,\alpha}[\theta_3(z_i - z_{2,\alpha}|\tau)]\prod_{\alpha<\beta}[\theta_3(z_{2,\alpha} - z_{2,\beta}|\tau)]^{\frac{1}{p_1}}\,, \qquad (4.25)
\end{aligned}$$

where $e^2 = p_1\,, e^* = \frac{1}{e}$ and a_l, b are still given by Eq. (4.21), e.g. $a_l^* = a_0 + l, b^* = b_0$. As emphasized in Ref. [14], $\Psi_{1,l}$ needs to be a normalized wave functions if we want to construct such kind of hierarchical wave functions.

One may ask how we know $\Psi_{1,l}$ in Eq. (4.25) are the normalized wave functions? The reason is that everything is consistent in the end. Another reason is that $\Psi_{1,l}$ in Eq. (4.25) look like the normalized wave functions in Chern-Simons theory. We hope that we can prove that $\Psi_{1,l}$ are the normalized wave functions elsewhere.

Let us consider the wave function Ψ_2. At first, Ψ_2 is a multicomponent (it has p_1 components) wave function. Secondly, when two quasiparticles are exchanged anti-clock, the wave function in the singular gauge will give a phase $e^{i\theta}$ with $\theta = -\frac{\pi}{p_1}$ (assuming inside the exchanging path, there are no other quasiparticles and we call θ as the statistical parameter of the quasiparticles). Thirdly, it is a Laughlin type wave function. Under the magnetic translation of the quasiparticle, the wave function should change up to an unitary transformation (the magnetic translation of the electron is described by Eq. (4.7). the magnetic translation of the quasiparticle will be discussed later). Finally the charge of the quasiparticle of the Laughlin state is $\frac{1}{p_1}$.

Thus we find that the wave function Ψ_2 shall be written as (we write its complex conjugate),

$$\begin{aligned}
\bar{\Psi}_2(z_{2,\alpha})_l &= \exp(-\frac{\pi\frac{\Phi}{p_1}\sum_\alpha y_{2,\alpha}^2}{\tau_2})F_2(z_{2,\alpha})_l\,, \\
F_2(z_{2,\alpha})_l &= \theta\begin{bmatrix} a_{2,l} \\ b_2 \end{bmatrix}(\sum_\alpha z_{2,\alpha} s_2 | e_2, \tau)
\end{aligned}$$

$$\prod_{\alpha<\beta}[\theta_3(z_{2,\alpha}-z_{2,\beta}|\tau)]^{\frac{1}{p_1}+p_2}\,, \tag{4.26}$$

where $e_2^2 = p_1(p_1p_2+1)\,, s_2^2 = p_2+\frac{1}{p_1}$ (the Laughlin type wave function of the quasiparticles on the torus has also been discussed in the context of the Chern-Simons theory [57, 55] and our construction of the wave function agrees with them, but note that here we work in **anyon gauge**, which is different from Refs. [57, 55]). From the form of Ψ_2, we can get the relation $|q_2\cdot\Phi| = \frac{\Phi}{p_1} = N_2(p_2+\frac{1}{p_1})$ where q_2 is the charge of the quasiparticle and equals to $\frac{1}{p_1}$ (assuming the electron charge is -1). Now we can write relations $p_1N_1+N_2=\Phi\,, \frac{\Phi}{p_1} = N_2(p_2+\frac{1}{p_1})$ as

$$\begin{aligned} &p_1N_1+N_2=\Phi\,,\\ &N_1-p_2N_2=0\,. \end{aligned} \tag{4.27}$$

To fix the parameters $a_{2,l}, b_2$, we impose the condition that

$$\sum_{l=0}^{p_1-1}\Psi_1(z_i,z_{2,\alpha})_l\Psi_2(z_{2,\alpha})_l \tag{4.28}$$

is periodic with the coordinates of the quasiparticles around two nontrivial cycles of the torus in order that the integral in Eq. (4.24) is well defined on the torus. So we shall have

$$\begin{aligned} &\Psi_1(z_{2,\alpha}+1)_l\Psi_2(z_{2,\alpha}+1)_l = \Psi_1(z_{2,\alpha})_l\Psi_2(z_{2,\alpha})_l\,,\\ &\Psi_1(z_{2,\alpha}+\tau)_l\Psi_2(z_{2,\alpha}+\tau)_l = \Psi_1(z_{2,\alpha})_{l+1}\Psi_2(z_{2,\alpha})_{l+1}\,, \end{aligned} \tag{4.29}$$

with $\Psi_{1,p_1}=\Psi_{1,0}\,, \Psi_{2,p_1}=\Psi_{2,0}$ where $\Psi_{1,l}=\Psi_1(z_i,z_{2,\alpha})_l\,, \Psi_{2,l}=\Psi_2(z_{2,\alpha})_l$. Then we get a set of solution of $a_{2,l}$ and b_2

$$\begin{aligned} &a_{2,l} = a^*_{2,l}[p_1(p_1p_2+1)]^{-\frac{1}{2}}\,, b_2 = b_2^*[p_1(p_1p_2+1)]^{-\frac{1}{2}}\,,\\ &a^*_{2,l} = a_0+l(p_1p_2+1)+\lambda p_1\,, b_2^* = b_0\,.\\ &\lambda = 0,1,\cdots,p_1p_2\,, l=0,1,\cdots,p_1-1\,. \end{aligned} \tag{4.30}$$

Those solutions will give p_1p_2+1 independent wave functions Ψ, which means that the degeneracy of the electron ground states is p_1p_2+1. Now we write the wave functions as

$$\Psi(z_i)_\lambda = \int\prod_\alpha dv_{2,\alpha}\sum_{l=0}^{p_1-1}\Psi_1(z_i,z_{2,\alpha})_l\Psi_2(z_{2,\alpha})_{l,\lambda}\,, \tag{4.31}$$

where λ is the index of the degeneracy of the electron wave functions Ψ and also is the index of the degeneracy of the condensed quasiparticle wave functions Ψ_2. We also note that p_2 must be a positive even integer, otherwise the θ function in the wave function will not be well defined.

4.2.2 N-level hierarchical wave functions

For a *n-level* hierarchical wave functions, we define some useful parameters; $d_m = |\det \Lambda(m)|$, where matrix $\Lambda_{i,j}(m) = \Lambda_{i,j}, 1 \le i,j \le m$ is a $m \times m$ matrix with $d_0 = 1$, and

$$\begin{aligned} e_m &= (d_m \cdot d_{m-1})^{\frac{1}{2}}, \\ s_m &= \frac{(d_m)^{\frac{1}{2}}}{(d_{m-1})^{\frac{1}{2}}}, \\ m &= 1, 2, \cdots, n. \end{aligned} \tag{4.32}$$

Now the wave functions are

$$\begin{aligned} \Psi(z_i)_{\lambda_n} = \int \prod dv_{2,\alpha} \cdots dv_{n,\alpha} \sum_{\lambda_1,\cdots,\lambda_{n-1}} & \Psi_1(z_{1,\alpha}, z_{2,\alpha})_{\lambda_1} \Psi_2(z_{2,\alpha}, z_{3,\alpha})_{\lambda_1,\lambda_2} \\ \cdots \Psi_i(z_{i,\alpha}, z_{i+1,\alpha})_{\lambda_{i-1},\lambda_i} & \cdots \Psi_n(z_{n,\alpha})_{\lambda_{n-1},\lambda_n}, \end{aligned} \tag{4.33}$$

where

$$\lambda_i = 0, 1, \cdots, d_i - 1. \tag{4.34}$$

Define

$$\begin{aligned} \tilde{\Psi}_i(z_{i,\alpha}, z_{i+1,\alpha})_{\lambda_{i-1},\lambda_i} &= \bar{\Psi}_i(z_{i,\alpha}, z_{i+1,\alpha})_{\lambda_{i-1},\lambda_i}, i = \textit{even integers}, \\ \tilde{\Psi}_i(z_{i,\alpha}, z_{i+1,\alpha})_{\lambda_{i-1},\lambda_i} &= \Psi_i(z_{i,\alpha}, z_{i+1,\alpha})_{\lambda_{i-1},\lambda_i}, i = \textit{odd integers}. \end{aligned} \tag{4.35}$$

Then when $1 < i < n$, we have

$$\begin{aligned} \tilde{\Psi}_i(z_{i,\alpha}, z_{i+1,\alpha})_{\lambda_{i-1},\lambda_i} &= \exp\left(-\frac{\pi\Phi(\frac{1}{d_{i-1}}\sum_\alpha y_{i,\alpha}^2 + \frac{1}{d_i}\sum_\alpha y_{i+1,\alpha}^2)}{\tau_2}\right) \\ &\quad \times F_i(z_{i,\alpha}, z_{i+1,\alpha})_{\lambda_{i-1},\lambda_i}, \\ F_i(z_{i,\alpha}, z_{i+1,\alpha})_{\lambda_{i-1},\lambda_i} &= \theta\begin{bmatrix} a_{i,\lambda_{i-1},\lambda_i} \\ b_i \end{bmatrix}\left(\sum_\alpha z_{i,\alpha} s_i + \sum_\alpha z_{i+1,\alpha} s_i^* | e_i, \tau\right) \times \end{aligned}$$

$$\prod_{\alpha<\beta}[\theta_3(z_{i,\alpha}-z_{i,\beta}|\tau)]^{s_i^2}\prod_{\alpha,\beta}[\theta_3(z_{i,\alpha}-z_{i+1,\beta}|\tau)]$$
$$\times\prod_{\alpha<\beta}[\theta_3(z_{i+1,\alpha}-z_{i+1,\beta}|\tau)]^{s_i^{*2}}. \tag{4.36}$$

Eq. (4.27) is generalized to

$$\sum_j \Lambda_{ij}N_j=\begin{cases}\Phi, & \text{if } i=1;\\ 0, & \text{otherwise.}\end{cases} \tag{4.37}$$

where N_j is the number of the condensed quasiparticles in level i. Moreover Eq. (4.30) becomes

$$\begin{aligned}&a_{i,\lambda_{i-1},\lambda_i}=a^*_{i,\lambda_{i-1},\lambda_i}e_i^*\,,\ b_i=b_i^*e_i^*\,,\\ &e_i^*=\frac{1}{e_i},\ s_i^*=\frac{1}{s_i},\\ &a^*_{i,\lambda_{i-1},\lambda_i}=a_0+\lambda_{i-1}d_i+\lambda_i d_{i-1}\,,\ b_i^*=b_0\,.\end{aligned} \tag{4.38}$$

The condition in Eq. (4.38) needs to be satisfied in order that

$$\sum_{\lambda_{i-1}}\Psi_{i-1}(z_{i-1,\alpha},z_{i,\alpha})_{\lambda_{i-2},\lambda_{i-1}}\Psi_i(z_{i,\alpha},z_{i+1,\alpha})_{\lambda_{i-1},\lambda_i} \tag{4.39}$$

is periodic with the coordinates $z_{i,\alpha}$. $\Psi_i(z_{i,\alpha},z_{i+1,\alpha})_{\lambda_{i-1},\lambda_i}$ have d_{i-1} components with λ_{i-1} being the index of the components of the wave functions and have d_i degeneracy with λ_i being the index of the degeneracy. These wave functions are the wave functions of the condensed quasiparticles of the *i-level* in anyon (singular) gauge. If the electron charge is -1, then the condensed quasiparticle in *i-level* has charge

$$\frac{(-1)^i}{d_{i-1}}, \tag{4.40}$$

and the statistics parameter θ of the condensed quasiparticle (here we use the anti-clock exchange of two quasiparticles and we will get a phase $e^{i\theta}$) is

$$(-1)^{i-1}\pi\frac{d_{i-2}}{d_{i-1}}. \tag{4.41}$$

$\Psi_1(z_{1,\alpha},z_{2,\alpha})_{\lambda_1}$ are still given by Eq. (4.25). Finally, we have

$$\begin{aligned}\tilde{\Psi}_n(z_{n,\alpha})_{\lambda_{n-1},\lambda_n} &= \exp\Big(-\frac{\pi\Phi(\frac{1}{d_{n-1}}\sum_\alpha y_{n,\alpha}^2)}{\tau_2}\Big)F_n(z_{n,\alpha})_{\lambda_{n-1},\lambda_n}\,,\\ F_n(z_{n,\alpha})_{\lambda_{n-1},\lambda_n} &= \theta\begin{bmatrix}a_{n,\lambda_{n-1},\lambda_n}\\ b_n\end{bmatrix}\Big(\sum_\alpha z_{n,\alpha}s_n|e_n,\tau\Big)\prod_{\alpha<\beta}[\theta_3(z_{n,\alpha}-z_{n,\beta}|\tau)]^{s_n^2},\end{aligned} \tag{4.42}$$

and $a_{n,\lambda_{n-1},\lambda_n}, b_n$ are still given by Eq. (4.38).

Moreover $p_i, , i = 2, 3, \cdots, n$ shall be positive even integers in order that the θ function appeared in the wave function be well defined.

From Eq. (4.37) we can show that the filling factor equals to $\nu = \frac{N_1}{\Phi} = \Lambda_{1,1}^{-1}$, where N_1 is the number of the electrons,

$$\nu = \cfrac{1}{p_1 + \cfrac{1}{p_2 + \cfrac{1}{\cdots + \cfrac{1}{p_n}}}}. \tag{4.43}$$

Finally the degeneracy of the wave functions $\Psi(z_i)_{\lambda_n}$ is

$$d_n = |\det \Lambda|, \tag{4.44}$$

which actually is the denominator of the filling and agrees with the prediction in the literature [102, 104, 113, 85].

4.2.3 Fractional statistics of the quasiparticles on the torus

The quasiparticles in the FQHE satisfy fractional statistics (See Ref. [6]; see also references in Ref. [117]). In this section we will show that the fractional statistics of the quasiparticles in the FQHE on the torus can be directly calculated from the wave functions. Hence this gives a concrete example how the fractional statistics can be realized on the torus. In Ref. [24], it has been proved that the fractional statistics of free anyons on the torus is consistent only with multi-component wave functions (see also Refs. [114, 49]; in the context of the Chern-Simons theory, this has been also observed in Ref. [54]; see also Refs. [55, 56]) and claimed that quasiparticles in the FQHE fits to this picture. It is worth to note that the quasiparticles in the FQHE interact with the magnetic field, so it needs to modify the results in Ref. [24] to the case that anyons interact with the magnetic field if one wants to apply the results from braid group analysis to the quasiparticles of the FQHE on the torus. We shall show that even if the anyons are exposed to the magnetic field, the wave functions will still need to be multi-component. We will calculate the braid statistics relation of the quasiparticles in the

Laughlin state and compare it with the braid statistics relation of the anyons on the torus from braid group analysis.

The normalized wave functions of the simplest Laughlin state with quasiparticles in anyon (singular) gauge are given by Eq. (4.25). These wave functions will give a conjugate representation of the braid statistics for the quasiparticles. This can be understood as following; the hierarchical construction of wave functions are $\Psi(z_i) = \int dw_\alpha \sum_l \Psi_1(z_i, w_\alpha)_l \Psi_2(w_\alpha)_l$, where $\Psi_2(w_\alpha)_l$ are the wave functions of the quasiparticles, $\Psi(z_i, w_\alpha)_l$ are the normalized wave functions of the electrons in the presence of the quasiparticles and both are in singular gauge (z_i are the coordinates of the electrons and w_α are the coordinates of the quasiparticles). From $\Psi_2(w_\alpha)$, we can get the braid statistics of the quasiparticles and from $\Psi_1(z_i, w_\alpha)$ we can get the complex conjugate representation of the braid statistics of the quasiparticles. Thus $\sum_l \Psi_1(z_i, w_\alpha)_l \Psi_2(w_\alpha)_l$ will give a trivial identity representation of the braid statistics which is needed for the well defined integration with the coordinates of the quasiparticles on the torus. What we discussed in the last section is the case that the wave functions of the quasiparticles are the Laughlin type and the hierarchical state is obtained. It is very natural to suggest that even the wave functions of the quasiparticles are not the Laughlin type (the quasiparticles are not condensed and may not have a Laughlin type wave function), $\sum_l \Psi_1(z_i, w_\alpha)_l \Psi_2(w_\alpha)_l$ still give a trivial identity representation of the braid statistics of the quasiparticles. Thus we can actually read out all braid statistics relation of the quasiparticles [24] from $\Psi(z_i, w_\alpha)_l$ (or the wave functions given by Eq. (4.25)) even if we do not know the form of the wave functions $\Psi(w_\alpha)_l$ (if the quasiparticles are condensed and have the Laughlin type wave functions, then $\Psi(w_\alpha)_l$ are given by Eq. (4.26)). Now we shall demonstrate how to calculate the braid relation of the fractional statistics of the quasiparticles from $\Psi(z_i, w_\alpha)_l$.

The generators of the braid group are

$$\tau_i, \rho_i, \sigma_k;\ i = 1, \cdots, n_q;\ k = 1, \cdots, n_q - 1\,, \tag{4.45}$$

where i is the index of anyon (quasiparticle in the FQHE) and n_q is the number of anyons.

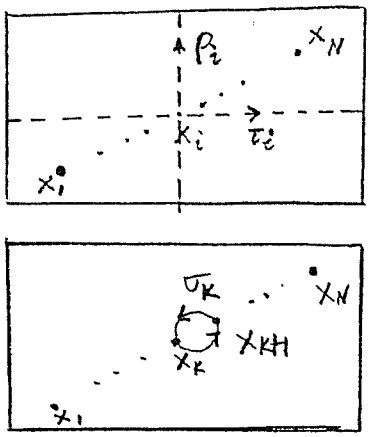

Figure 4.2: The generators of the braid group.

The generators σ_k are the anti-clockwise exchanges of anyons k and $k+1$ (we assume that there are no particles in the region of the exchange path). The generators τ_i and ρ_i are the **magnetic** translation operators of the particle i along the fundamental non-contractible loops of the torus (because of the presence of the magnetic field, we have the magnetic translation symmetry instead of the translation symmetry).

The operators i, τ_i, ρ_i (acting on the wave function $\Psi_2(w_\alpha)_l$) are given by

$$\begin{aligned} \tau_i &= \exp(ip_{w_{i,1}}), \\ \rho_i &= \exp(i\tau_1 p_{w_{i,1}} + i\tau_2 p_{w_{i,2}} - i2\pi\frac{\Phi}{m}w_{i,1}), \end{aligned} \tag{4.46}$$

because the charge of the quasiparticles is $-\frac{1}{m}$ of the one of the electron, where the filling of the Laughlin state is taken as $\frac{1}{m}$ and $w_{i,1} = Re(w_i), w_{i,2} = Im(w_i)$.

The magnetic translation operators of the quasiparticle i, τ_i, ρ_i **acting on** the wave function $\Psi_1(z_i, w_\alpha)_l$ are given by

$$\begin{aligned} \tau_i &= \exp(ip_{w_{i,1}}), \\ \rho_i &= \exp(i\tau_1 p_{w_{i,1}} + i\tau_2 p_{w_{i,2}} + i2\pi\frac{\Phi}{m}w_{i,1}), \end{aligned} \tag{4.47}$$

Actually τ_i, ρ_i, σ_k in Eq. (4.47) will give the complex conjugate representation of the braiding operators of the quasiparticles in Eq. (4.46) on the torus, since they act on the wave functions $\Psi_1(z_i, w_\alpha)_l$. Assume X is a braid operator and let X act on $\Psi_1(z_i, w_\alpha)_l = \Psi_{1,l}$ and $\Psi_2(w_\alpha)_l = \Psi_{2,l}$. Then we will have $X\Psi_{1,l} = \Psi_{1,j}U_x(1)_{jl}$ where X is an operator defined in Eq. (4.47), and $X\Psi_{2,l} = \Psi_{2,j}U_x(2)_{jl}$ where X is an operator defined in Eq. (4.46) . $U_x(1)$ and $U_x(2)$ are unitary matrices. Moreover, we have relation $U_x(1)_{jl} = \bar{U}_x(2)_{jl}$, which will insure that $\sum_l (X\Psi_{1,l})(X\Psi_{2,l}) = \sum_l \Psi_{1,l}\Psi_{2,l}$ and this turns out to mean that the function $\sum_l \Psi_{1,l}\Psi_{2,l}$ is periodic with the coordinates of the quasiparticles around two non-contractible loops of the torus. The operators τ_i, ρ_i, σ_k in Eq. (4.46) shall commute with the Hamiltonian of the quasiparticles, which is given by

$$H = \sum_i^{n_q} \frac{1}{2M_q}[(p_{w_{i,1}} - \frac{B}{m}w_{i,2})^2 + (p_{w_{i,2}})^2]. \tag{4.48}$$

Now we calculate the representation of the operators i, τ_i, ρ_i **acting on** the wave function $\Psi_1(z_i, w_\alpha)_l$, which are given by Eq. (4.47) . For simplicity, we now choose $a_i = ie^{-1}, b = 0, i = 0, 1, \cdots, m-1$ in Eq. (4.25). Thus we have $\phi_1 = \phi_2 = \pi(\Phi - 1)$ (any choices ϕ_1, ϕ_2 will not affect the braid relations). Now we denote the wave functions $\Psi_1(z_i, w_\alpha)_l$ as Ψ_l, a multicomponent column. Furthermore we assume

$$\begin{aligned} &w_{1,1} < w_{2,1} < \cdots < w_{n_q,1}, \\ &w_{1,2} < w_{2,2} < \cdots < w_{n_q,2}. \end{aligned} \tag{4.49}$$

Then by applying σ_i, τ_i, ρ_i on Ψ_l, we have $\sigma_i = e^{\frac{i\pi}{m}} I_m$ with I_m being identity $m \times m$ matrix and

$$\begin{aligned} \tau_1 &= e^{\frac{\pi i(\Phi-1)}{m}} \begin{pmatrix} 1 & 0 & \cdots & 0 \\ 0 & c & \cdots & 0 \\ \vdots & \vdots & \ddots & \vdots \\ 0 & 0 & \cdots & c^{m-1} \end{pmatrix}, \\ \rho_1 &= e^{\frac{-\pi i(\Phi-1)}{m}} \begin{pmatrix} 0 & \cdots & 0 & 1 \\ 1 & \cdots & 0 & 0 \\ \vdots & \vdots & \ddots & \vdots \\ 0 & \cdots & 1 & 0 \end{pmatrix}, \end{aligned} \tag{4.50}$$

where $c = e^{\frac{i2\pi}{m}}$. Other τ_i and ρ_i are given by the relation

$$\tau_{i+1} = e^{\frac{-2\pi i}{m}}\tau_i, \rho_{i+1} = e^{\frac{2\pi i}{m}}\rho_i\,. \tag{4.51}$$

4.2.4 Braid group analysis of the fractional statistics on the torus

The main relations of braid statistics of free anyons on the torus are (Refs. [24, 25]. See also Ref. [59])

$$\begin{aligned}
&\sigma_j\sigma_{j+1}\sigma_j = \sigma_{j+1}\sigma_j\sigma_{j+1}\,,\\
&\tau_{j+1} = \sigma_j^{-1}\tau_j\sigma_j^{-1}\,, \rho_{j+1} = \sigma_j\rho_j\sigma_j\,,\\
&\rho_j^{-1}\tau_{j+1}\sigma_j^{-2}\rho_j\sigma_j^2\tau_{j+1}^{-1} = \sigma_j^2\,,\\
&\sigma_1\sigma_2\cdots\sigma_{N-1}^2\cdots\sigma_2\sigma_1 = \rho_1^{-1}\tau_1^{-1}\rho_1\tau_1\,.
\end{aligned} \tag{4.52}$$

If the anyons are exposed to the magnetic field, we just need to change the last relation in Eq. (4.52),

$$\sigma_1\sigma_2\cdots\sigma_{N-1}^2\cdots\sigma_2\sigma_1 = \rho_1^{-1}\tau_1^{-1}\rho_1\tau_1 e^{2\pi i q\Phi}\,, \tag{4.53}$$

with q being the charge of anyons and Φ being the magnetic flux out of the torus. The reason for the extra phase is that, when we do the operation of the left of Eq. (4.53), we get a closed curve with zero area which can be deformed to the operation of the right equation [24, 25]. However, the curve needs to encompass the whole surface during the deformation. So we get an extra phase (Aharonov and Bohm phase) because anyons now interact with the magnetic field.

We can choose the base of the wave functions such that $\sigma_i = e^{i\theta}I_M$ with I_M as $M \times M$ identity matrix [24], then from the second and third equation in Eq. (4.52), we get

$$\tau_i\rho_j = \rho_j\tau_i e^{2i\theta}\,. \tag{4.54}$$

By taking the determinant of Eq. (4.54), we have

$$\exp(2Mi\theta) = 1\,. \tag{4.55}$$

If $\theta = \pi\frac{r}{s}$ with r and s are coprime with each other, so from Eq. (4.55), we need $M = ns$ with n being integer. Furthermore from Eq. (4.53), we have another equation

$$e^{2N\theta - 2\pi q\Phi} = 1\,. \tag{4.56}$$

which imply that $\frac{Nr}{s} - q\Phi$ should be integer. The braid statistics relation of the quasiparticles of the FQHE in the above example turn out to fit to the picture from the braid group analysis. Now $\theta = \frac{\pi}{m}$ and the wave functions of the quasiparticles are m component, so Eq. (4.55) is fulfilled. Furthermore in this example, Eq. (4.56) becomes $\frac{n_q}{m} - \frac{\Phi}{m} = integer$ with n_q as the number of the quasiparticles. Because we have relation $mn_e + n_q = \Phi$ where n_e is the electron number, so Eq. (4.56) is automatically satisfied.

4.2.5 Modular invariance and large gauge transformations of hierarchical wave functions

The modular transformations and the large gauge transformations of the wave functions in the FQHE have been considered in Refs. [57, 55, 80] (see also the next section). How are about the wave functions constructed here? Let us first discuss the modular transformations of the wave functions. If we require the wave functions $\Psi(z_i)_{\lambda_n}$ are transformed covariantly under the modular transformation, $z \to \frac{z}{\gamma\tau+\delta}$ and $\tau \to \frac{\alpha\tau+\beta}{\gamma\tau+\delta}$, then we find that a_0, b_0 need to equal to $\frac{1}{2}$. The proving needs the modular transformation of the quasiparticle wave functions $\Psi_{m,n}$, where m is the index of the component and n is the index of the degeneracy. Under the modular transformations $\tau \to \tau + 1$ and $z \to z$, the wave functions $\Psi_{m,n}$ in the case of $a_0 = \frac{1}{2}, b_0 = \frac{1}{2}$, will be changed up a unitary phase. Under the modular transformations $\tau \to \frac{-1}{\tau}$ and $z \to \frac{z}{\tau}$, $\Psi_{m,n} \to \mathcal{N}\sum_{m'}\sum_{n'} f_1(m,m')f_2(n,n')\Psi_{m',n'}$, where $\mathcal{N}$ can depend on the coordinates of the quasiparticles, but it does not depend on m', n'. These results have been discussed in Refs. [57, 55, 74].

Now we come to discuss the large gauge transformations. We follow the previous discuss about the large gauge transformations for the Laughlin wave function on the torus. Due to the nontrivial topology of the torus, we have gauge transformations like $U_1 = \exp(\frac{-2\pi iy}{\tau_2})$ and

$U_2 = \exp[\frac{\pi(\tau\bar{z}-\bar{\tau}z)}{\tau_2}]$. If we choose the magnetic potential as $A_1 = (-By + \frac{2\pi c_1}{\tau_2})\hat{\mathrm{x}}$, $A_2 = \frac{2\pi c_2}{\tau_2}\hat{\mathrm{y}}$ with c_1, c_2 being constant and $c = ic_1 - c_2$, then under the gauge transformations generated by U_1 and U_2, we will have $c \to c+m+n\tau$. When we take magnetic potential $A_1 = (-By+\frac{2\pi c_1}{\tau_2})\hat{\mathrm{x}}$, $A_2 = \frac{2\pi c_2}{\tau_2}\hat{\mathrm{y}}$, the wave functions $\Psi(z_i)_{\lambda_n}$ will depend on c. So we denote the wave functions now as $\Psi(z_i, c)_{\lambda_n}$. The large gauge transformations on the wave functions are defined as follows; under the transformation U_1, $\Psi(z_i, c)_{\lambda_n} \to \prod_i [U(z_i)_1]^{(-1)} G_1(c)\Psi(z_i, c+1)_{\lambda_n}$, and under the transformation U_2, $\Psi(z_i, c)_{\lambda_n} \to \prod_i [U(z_i)_2]^{(-1)} G_2(c)\Psi(z_i, c+\tau)_{\lambda_n}$ (Under suitable choices of $G_1(c), G_2(c)$, those operators actually form an Heisenberg algebra [57, 55]). We find that the wave functions $\Psi(z_i, c)_{\lambda_n}$ change up to a phase under the gauge transformation U_1 and change from one to another under the gauge transformation U_2. Thus we can say that the degeneracy will disappear by fixing the gauge of the magnetic field. This maybe offer some reasons why this kind of the center coordinate degeneracy of the FQHE on the torus is **quite** physically irrelevant in some aspects[41].

The proving of the above statements is quite technical and complicated. Because the discussion about the modular transformations and large gauge transformation of the wave function may not be physically interesting, so we will not pursue it here and just state the results. The discussion of the modular transformations and large gauge transformations for another kind of hierarchical wave functions on the torus can be found in Ref. [80] (see also the next section).

We summarize the present section. We have constructed Halperin's hierarchical wave functions on the torus. In order to construct such wave functions on the torus, we need first to have the normalized quasiparticle wave functions on the torus. The parameters of the quasiparticle wave functions can be fixed from the requirement of a well defined integration of the wave functions on the torus by the coordinates of the quasiparticles. Then the degeneracy of the wave function functions is obtained, which shows how the topological order is manifested in this kind of hierarchical FQHE wave function on the torus and agrees with the prediction in the literature. We also calculate the braid matrix of the fractional statistics of

the FQHE quasiparticles on the torus and compare them to the general results from braid group analysis. Finally, the modular transformations and large gauge transformations of the wave functions are briefly discussed, and it is found that the parameters can be fixed if we want the wave functions to be transformed covariantly under the modular transformations, and that the unique ground state appears by fixing the gauge of the magnetic field.

4.3 Read's hierarchy on the torus

Another type of the hierarchical wave function on the plane has been given in Ref. [93]. We will construct here such hierarchical wave function on the torus.

The hierarchical FQHE, similar to the one considered by N. Read (see Ref. [93]or the last chapter) on the plane, can be characterized by the symmetric matrix Λ with $\Lambda_{1,1}$ being an odd positive integer and other diagonal elements being even integers. In particular we consider an integer lattice defined by matrix

$$\Lambda = \begin{pmatrix} p_1 & -1 & 0 & \dots & 0 & 0 \\ -1 & p_2 & -1 & 0 & \dots & 0 \\ 0 & -1 & p_3 & -1 & 0 & \dots \\ \vdots & \vdots & \ddots & \ddots & \vdots & \vdots \\ \vdots & \vdots & \ddots & \ddots & \vdots & \vdots \\ 0 & \dots & 0 & -1 & p_{l-1} & -1 \\ 0 & 0 & \dots & 0 & -1 & p_l \end{pmatrix}, \tag{4.57}$$

where p_1 is a positive integer, $p_i, i = 2, 3, \dots, l$ are even integers. Λ describes a *l-level* hierarchical state. The coordinates of the particles are expressed by z_i^s, where z_i^s is the coordinate of the *ith* particle in level s, for example, $z_i^1 = z_i$ is the coordinate of the *ith* electron. The wave functions on the torus are supposed to be

$$\begin{aligned} F(z_i) &= \int \prod_{s=2,i}^{s=l} dz_i^s d\bar{z}_i^s \theta \begin{bmatrix} a \\ b \end{bmatrix} (\sum_{s=1}^{l} \sum_i z_i^s e_s | e, \tau) \\ &\times \prod_{i,j,s(1)\le s(2)} [\theta_3(z_i^{s(1)} - z_j^{s(2)} | \tau)]^{e_{s(1)} \cdot e_{s(2)}}. \end{aligned} \tag{4.58}$$

The variables $z_i^s, s = 2, 3, \dots, l$ are integrated in the region of the torus. $i, j, s(1) \le s(2)$ means that if $s(1) = s(2)$, then we take $i < j$. The explicit form of e_i is not important because the final results only depend on the inner products among e_i. In order that the

function integrated in Eq. (4.58) is mathematical well defined on the torus, it is required that the integrated function is periodic with coordinates $z_i^s, s = 2, 3, \ldots, l$ around the non-contractible loops of the torus.

In order that the θ function in Eq. (4.58) be well defined, the matrix Λ must be positive definite. So $p_i, i = 2, 3, \ldots, l$ must be positive even integers.

By applying the condition by Eq. (4.9), we get one of those requirements,

$$\sum_j \Lambda_{ij} N_j = \begin{cases} \Phi, & \text{if } i = 1; \\ 0, & \text{otherwise,} \end{cases} \tag{4.59}$$

where N_j is the number of the particles in level j. The filling factor equals to $\nu = \frac{N_1}{\Phi} = e_1^* \cdot e_1^* = \Lambda_{1,1}^{-1}$, where N_1 is the number of the electrons, and we find from Eq. (4.59)

$$\nu = \cfrac{1}{p_1 - \cfrac{1}{p_2 - \cfrac{1}{\cdots - \cfrac{1}{p_l}}}}. \tag{4.60}$$

We have construct the Halperin's hierarchical wave function on the torus previously in which the filling factor for this case turns out to be

$$\nu = \cfrac{1}{p_1 + \cfrac{1}{p_2 + \cfrac{1}{\cdots + \cfrac{1}{p_l}}}},$$

where p_1 is an odd positive integer and p_i with $i \neq 1$ is a positive even integer. Actually, this filling, and the filling factors in Eq. (4.60), the filling of charge conjugate state of the state with filling given by Eq. (4.60) (about the conjugate state, see Ref. [32, 72]), cover almost all kinds of fillings realized in the experiments with the filling having an odd denominators [124]. The filling observed in experiment quoted in Ref. [124], which does not belong to the above category, is $\frac{3}{11}$. The mathematical requirement for the well defined wave functions restricts the possible types of the filling factors of those kinds of hierarchical wave functions and this fact maybe can explain why the filling factors of the types discussed above cover almost all fillings observed in the experiments.

Let us continue the discussion of the wave functions given by Eq. (4.58). Another requirement for the periodicity of the function in Eq. (4.58) is

$$\begin{aligned} & e_s \cdot b = integer\,, e_s \cdot a = integer\,, s = 2, 3, \ldots, l\,, \\ & \phi_1 = \pi(\Phi + 1) + 2\pi e_1 \cdot a + 2\pi \cdot integer \\ & \phi_2 = \pi(\Phi + 1) - 2\pi e_1 \cdot b + 2\pi \cdot integer\,. \end{aligned} \tag{4.61}$$

By writing a, b as $a = a^s e_s^*\,, b = b^s e_s^*$ in the bases of the lattice Λ^* (the inverse lattice of Λ), Eq. (4.61) become

$$\begin{aligned} a^1 &= \frac{\phi_1}{2\pi} + \frac{\Phi + 1}{2} + n_1\,, \\ b^1 &= -\frac{\phi_2}{2\pi} + \frac{\Phi + 1}{2} + n_2\,, \\ a^s, b^s &= integer,\ s = 2, 3, \ldots, l. \end{aligned} \tag{4.62}$$

The difference between two solutions of a, b lies on $n^s e_s^*$ with n^s being integers. The two solutions of a will give two orthogonal wave functions, if the difference of two a does not lie on $k^s e_s$ with k^s being integers, the two solutions of b with the same a will give the same wave function, as it can be shown by using Eq. (4.15). So all wave functions of Laughlin-Jastrow type are described by the solutions

$$\begin{aligned} a &= [\frac{\phi_1}{2\pi} + \frac{\Phi + 1}{2}]e_1^* + \sum_s n^s e_s^*\,, \\ b &= [-\frac{\phi_2}{2\pi} + \frac{\Phi + 1}{2}]e_1^*\,, \\ n^s e_s^* &\subset \frac{\Lambda^*}{\Lambda}\,. \end{aligned} \tag{4.63}$$

$\frac{\Lambda^*}{\Lambda}$ means the space $n^s e_s^*$ with n^s being integers and identifying $a(1) = n^s(1)e_s^*$ with $a(2) = n^s(2)e_s^*$ if $a(1) - a(2) = k^s e_s$ with k^s being integers. There are $\det\Lambda$ solutions to Eq. (4.63). So the degeneracy of the ground states is $\det\Lambda$, which actually is the denominator of the filling.

To consider the excitations of the states given by Eq. (4.58), we take the simplest case as

an example, one quasiparticle at z. Thus the wave functions of Eq. (4.58) become

$$\begin{aligned} F(z_i) &= \int \prod_{s=2,i}^{s=l} dz_i^s d\bar{z}_i^s \theta \begin{bmatrix} a \\ b \end{bmatrix} (\sum_{s=1}^{l} \sum_i z_i^s e_s + z\mathbf{q}|e,\tau) \\ &\times \prod_{i,j,s(1)\le s(2)} [\theta_3(z_i^{s(1)} - z_j^{s(2)}|\tau)]^{e_{s(1)}\cdot e_{s(2)}} \\ &\times \prod_{i,s} [\theta_3(z - z_i^s|\tau)]^{\mathbf{q}\cdot e_s}, \end{aligned} \tag{4.64}$$

where $\mathbf{q} = q^s e_s^*$ with q^s being integers. $\mathbf{q}$ will characterize the statistics and charge of the quasiparticle. Eq. (4.59) now changes to

$$\sum_j \Lambda_{ij} N_j + e_i \cdot \mathbf{q} = \begin{cases} \Phi, & \text{if } i = 1; \\ 0, & \text{otherwise.} \end{cases} \tag{4.65}$$

Eq. (4.61), Eq. (4.62) and Eq. (4.63) remain unchanged. It can be shown

$$\begin{aligned} F(z+1|a,b) &= F(z|a,b)\exp(2\pi i a\cdot\mathbf{q} + \pi i \Phi e_1^*\cdot\mathbf{q} - \pi i \mathbf{q}^2), \\ F(z+\tau\mathbf{q}|a,b) &= F(z|a+\mathbf{q},b)\exp(-\pi i \mathbf{q}\cdot e_1^*\Phi(2z+\tau) \\ &\quad -2\pi i \mathbf{q}\cdot b + \pi i \mathbf{q}^2 - \pi i \mathbf{q}\cdot e_1^*\Phi). \end{aligned} \tag{4.66}$$

The charge of the quasiparticle is $e_1^*\cdot\mathbf{q}$. and the statistics parameter of the quasiparticle $e^{i\theta}$ obtained by interchanging two identical excitations, is given by $\theta = \pi\mathbf{q}^2$. The normalized wave functions given by Eq. (4.64) should contain a normalization constant which depends on the coordinate z. The normalized wave functions are

$$\Psi_n(z_i,z) = \Psi(z_i,z)\exp\left(-\frac{\Phi e_1^*\cdot\mathbf{q}y^2}{\tau_2}\right). \tag{4.67}$$

The wave functions of the FQHE is related to the wave functions of Chern-Simons theory [90, 125, 92, 14, 93, 85, 57]. The functions, which are integrated by the coordinates of the quasiparticles to get the wave functions of the FQHE, are

$$\begin{aligned} \Psi_b(z_i^s) &= \exp(-\frac{\pi\Phi\sum_i y_i^2}{\tau_2})\theta\begin{bmatrix} a \\ b \end{bmatrix}(\sum_{s=1}^{l}\sum_i z_i^s e_s|e,\tau) \\ &\times \prod_{i,j,s(1)\le s(2)} [\theta_3(z_i^{s(1)} - z_j^{s(2)}|\tau)]^{e_{s(1)}\cdot e_{s(2)}}. \end{aligned} \tag{4.68}$$

They can be written as

$$\Psi_b(z_i^s) = \exp(-\frac{\pi(\sum_{i,s} y_i^s e_s)^2}{\tau_2})\theta\begin{bmatrix}a\\b\end{bmatrix}(\sum_{s=1}^{l}\sum_i z_i^s e_s|e,\tau) \times \prod_{i,j,s(1)\le s(2)} \exp(\frac{1}{2}P(z_i^{s(1)} - z_j^{s(2)}|\tau)e_{s(1)}\cdot e_{s(2)})\cdot \textit{unitary phase}\,. \quad (4.69)$$

If take the magnetic potential as $A_1 = (-By + \frac{2\pi c_1}{\tau_2})\hat{\mathrm{x}}$, $A_2 = \frac{2\pi c_2}{\tau_2}\hat{\mathrm{y}}$, then Eq. (4.69) becomes

$$\Psi_b(z_i^s) = \exp(\frac{\pi}{2\tau_2}[ce_1^* + \sum_i(\bar{z}_i^s - z_i^s)e_s]^2 + \frac{\pi(\sum_{i,s} y_i^s e_s)^2}{\tau_2}) \times \prod_{i,j,s(1)\le s(2)} \exp(\frac{1}{2}P(z_i^{s(1)} - z_j^{s(2)}|\tau)e_{s(1)}\cdot e_{s(2)}) \times\theta\begin{bmatrix}a\\b\end{bmatrix}(\sum_{s=1}^{l}\sum_i z_i^s e_s - ce_1^*|e,\tau)\cdot \textit{unitary phase}\,, \quad (4.70)$$

which also are invariant up to a phase under the large gauge transformation U_1 and change from one state to another under the large gauge transformation U_2 (for Laughlin state at simple filling, see the discussion before). The unitary phase in Eq. (4.69) and Eq. (4.70) depends on the coordinates z_i^s. $P(z)$ is the scalar propagator, satisfying

$$\frac{1}{4}\nabla^2 P(z) = \bar{\partial}\partial P(z) = \pi(\delta^2(z) - \frac{1}{\tau_2})\,, \quad (4.71)$$

and is given by

$$P(z) = \ln\left|\frac{\theta[\frac{\frac{1}{2}}{\frac{1}{2}}](z|\tau)}{\theta'[\frac{\frac{1}{2}}{\frac{1}{2}}](0|\tau)}\right|^2 + \frac{\pi}{2\tau_2}(z-\bar{z})^2\,. \quad (4.72)$$

However it can be shown that wave functions of Eq. (4.70) are the wave functions of the generalized Abelian Chern-Simons theory (up to a unitary phase which actually relates to singular gauge transformation) on the multidimensional R^l/Λ compact Abelian gauge group, where Λ is the integer lattice with bases e_i defined by $e_i\cdot e_j = \Lambda$. The large component of Chern-Simons potential (see Ref. [65]) here is equal to ce_1^*. The wave functions of the Abelian Chern-Simons theory on the torus have been studied detailed in Ref. [55] and the discussion of the wave functions of the generalized Abelian Chern-Simons theory on the torus can be found in Ref. [65]. The lagrangian of the generalized Abelian Chern-Simons theory which we

are interested in, is given by

$$L = \int dv[-\frac{1}{4\pi}\epsilon^{\mu\nu\lambda}A_\mu \cdot \partial_\nu A_\lambda + A_0 \cdot (\sum_{s,i} e_s \delta^2(z - z_i^s) - \frac{1}{2\pi} \cdot Be_1^*)], \tag{4.73}$$

where $A_\mu = A_{s,\mu}e_s$ and with the condition

$$\int dv(\sum_{s,i} e_s \delta^2(z - z_i^s) - \frac{1}{2\pi} \cdot Be_1^*) = 0\,. \tag{4.74}$$

Eq. (4.74) can be written as

$$\sum_s N_s e_s - \Phi e_1^* = 0\,, \tag{4.75}$$

which is the same as Eq. (4.59). The lagrangian of Eq. (4.73) will give the right statistics for the electrons and the quasiparticles. To introduce an excitation, we simply add a term $A_0 \cdot \mathbf{q}\delta^2(z - z_q)$, where $\mathbf{q} = q^s e_s^*$ with q^s being integers. Then we have

$$\sum_s N_s e_s + \mathbf{q} - \Phi e_1^* = 0\,, \tag{4.76}$$

which is the same as Eq. (4.65).

This kind form of the generalized Abelian Chern-Simons action appears in the dual form Ginzburg-Landau-Chern-Simons (GLCS) theory of FQHE (see Ref. [14]; also Ref. [26]). The generalized Abelian Chern-Simons given by Eq. (4.73) characterizes the essential properties of the hierarchical FQHE, from which we can obtain the degeneracy of the ground state and the excitation spectrums, etc..

To discuss the modular property of this hierarchical wave function, let us introduce $\theta_1 = [\frac{\phi_1}{2\pi} + \frac{\Phi+1}{2}]e_1^*, \theta_2 = [-\frac{\phi_2}{2\pi} + \frac{\Phi+1}{2}]e_1^*$ (this notation is the same as Ref. [65]). If the full modular invariance (covariance) is required, then we need to choose (see Refs. [65, 55]) $\theta_1 = \theta_2 = \frac{e_1^*}{2}$. We may also remark that if θ_1, θ_2 are zero, the wave functions of the FQHE will be transformed covariantly only under the **subgroup** of the modular transformation $\tau \to \frac{\alpha\tau+\beta}{\gamma\tau+\delta}$ which is generated by $\tau \to \tau + 2\,, and \tau \to -\frac{1}{\tau}$ (the corresponding coordinate transformation under the modular transformation is $z \to \frac{z}{\gamma\tau+\delta}$)[1]. Above results can be arrived by using the method developed, for example in Refs. [65, 55].

[1]This also has been observed (for the case of the filling $\nu = \frac{1}{m}$) in Ref. [23].

In summary, we have obtained another kind of the hierarchical wave functions on the torus. The degeneracy of the ground states is obtained. The relation of the wave functions with the wave functions in the Chern-Simons theory is discussed.

We shall remark here that the Halperin's hierarchical wave functions are also related to the generalized Ablein Chern-Simons theory with $e_i.e_j = \Lambda_{ij}$ where Λ is given by Eq. (4.23). In this case, Λ is not positive-definite. The detailed discussion will be considered elsewhere.

5 FQHE on Riemann surfaces

In the last two chapters, we have constructed wave functions of the FQHE on the sphere and torus. In this chapter, We will construct the Laughlin wave function on Riemann surfaces, We first study the quantum mechanics of a system of charged particles interacting with a magnetic field on Riemann surfaces. We explicitly construct the wave functions of ground states in the case of a metric proportional to the Chern form of the θ-bundle, and the wave functions of the Landau levels in the case of the the Poincaré metric. The degeneracy of the Landau levels is obtained by using the Riemann-Roch theorem. Then we construct the Laughlin wave function on Riemann surfaces and discuss the mathematical structure hidden in the Laughlin wave function. Moreover the degeneracy of the Laughlin states is also discussed.

5.1 Motivation

We study here the quantum mechanics of a system of charged particles living on a two dimensional surface and interacting with a magnetic field orthogonal to the surface. When the surface is an infinite plane and the magnetic field is constant, we have the well known problem of the Landau levels. This problem has received a renewed interest in the context of the quantum Hall effect (QHE)(for a review, see Ref. [91]). In fact, the QHE appears to be related to a rich physical and also mathematical structure, which is worthwhile to investigate in various possible configurations.

A particular intriguing and interesting case occurs when the two dimensional surface

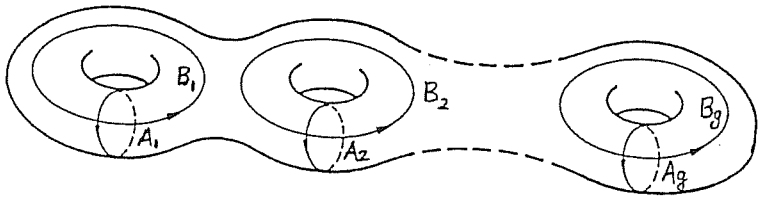

Figure 5.1: A Riemann surface.

is a Riemann surface of high genus. Although not directly accessible to experiments, the problem of the physics on the Riemann surface happens to have deep relations with modern investigations on some interesting problems, like the occurrence of chaos in the surface with a negative curvature [37], and recent developments in the theory of Riemann surfaces, for example, the moduli of the surface and the vector bundles defined on the moduli [28].

In this chapter, we will explore the problem directly from the point of view of quantum mechanics, by defining the Hamiltonian and then constructing eigenfunctions of the Hamiltonian. In Ref. [20], the problem in the case of the surface being an open hyperbolic plane with a constant negative curvature was considered and Ref. [3] discussed the scattering on a hyperbolic torus. Instead, here we will mainly consider compact Riemann surfaces. Ref. [11] obtained some interesting results about eigenvalues and their multiplicity of a particle interacting with the magnetic field, in the case of Riemann surfaces of high genus with a constant curvature by using some results from the mathematical literature, for example by using Selberg trace formula (for a review on Selberg trace formula, see Ref. [51]; see also Ref.

[8] for a related discussions).

We pursue this investigation by explicit construction, which allows us to derive, and in some sense, generalize all known results in a straightforward way and provides us also the wave functions of Landau levels. The wave functions turn out to be the holomorphic line bundle defined on the surface, or for the high Landau levels, they are obtained by applying some covariant derivatives on the holomorphic line bundle. Actually, the holomorphic line bundle can be defined without reference to a particular metric. Thus although we consider mainly two cases for the metric, we can make some possible interesting generalizations to metrics of other kinds, mainly for the case of the ground states.

It is known that the fractional quantum Hall effect (FQHE) is related to the properties of the ground states, through the Laughlin wave function. We will show the construction of the Laughlin wave function on Riemann surfaces and indicate some interesting relations with recent results appeared in the mathematical literature[28].

We organize this chapter as follows. In section 5.2, we use the Riemann-Roch theorem to derive the degeneracy of the ground states of a particle interacting with a constant magnetic field. As we will see, the natural definition of a constant magnetic field is to take it proportional to the area form. We consider first the case of a metric which is proportional to the Chern form of the θ-function line bundle [1], defined explicitly in section 5.2. Since it is expressed in terms of the canonical holomorphic one forms, we will call it "canonical θ-metric", abbreviated as CθM. We understand there is not a standard name for this metric in the literature. It is proportional to the so called Bergman kernel, which is also proportional to the curvature of the Arakelov metric. In section 5.3, we construct the Landau levels on the surface with the Poincaré metric. The eigenvalues of the Landau levels and their multiplicity are obtained. In section 5.4, we continue the discussion of section 3 to construct the wave functions of the the Landau levels. In section 5.5, we present the Laughlin wave function on high genus surfaces with particular metrics. The mathematical structure hidden in the Laughlin wave function is pointed out. In particular, we also discuss the degeneracy of the

Laughlin states.

5.2 Ground states on Riemann surfaces with the CθM metric

We consider a particle on a Riemann surface interacting with a "monopole" field, that is the integral of the field strength out of the surface is different from zero. We use the metric $ds^2 = g_{z\bar{z}}dzd\bar{z}$ in complex coordinates and the volume form is $dv = [ig_{z\bar{z}}/2]dz \wedge d\bar{z} = g_{z\bar{z}}dx \wedge dy$. We apply a constant magnetic field on the surface. The natural definition of the constant magnetic field to the high genus Riemann surface[3, 15] is

$$F = Bdv = (\partial_z A_{\bar{z}} - \partial_{\bar{z}} A_z)dz \wedge d\bar{z},$$

with constant B. Thus $\partial_z A_{\bar{z}} - \partial_{\bar{z}} A_z = ig_{z\bar{z}}B/2$. The flux Φ is given by $2\pi\Phi = \int F = BV$, where V is the area of the surface and we assume here $B > 0$ ($\Phi > 0$). The Hamiltonian of an electron on the surface under the magnetic field is given by the Laplace-Beltrami operator,

$$\begin{aligned} H &= [1/2m\sqrt{g}](P_\mu - A_\mu)g^{\mu\nu}\sqrt{g}(P_\nu - A_\nu) \\ &= [g^{z\bar{z}}/m][(P_z - A_z)(P_{\bar{z}} - A_{\bar{z}}) + (P_{\bar{z}} - A_{\bar{z}})(P_z - A_z)] \\ &= [2g^{z\bar{z}}/m](P_z - A_z)(P_{\bar{z}} - A_{\bar{z}}) + [B/2m] \end{aligned} \tag{5.1}$$

where $g^{z\bar{z}} = [1/g_{z\bar{z}}]$ and $P_z = -i\partial_z$, $P_{\bar{z}} = -i\partial_{\bar{z}}$ ($\partial_z = (\partial_x - i\partial_y)/2$). The inner product of two wave functions is defined as $< \psi_1|\psi_2 >= \int dv\bar{\psi}_1 \times \psi_2$.

$H' = [2g^{z\bar{z}}/m](P_z - A_z)(P_{\bar{z}} - A_{\bar{z}})$ is a positive definite hermitian operator because $< \psi|H'|\psi > \geq 0$ for any ψ. Thus if $H'\psi = 0$, then ψ satisfies $(P_{\bar{z}} - A_{\bar{z}})\psi = 0$. The solutions of this equation are the ground states of the Hamiltonian H or H', i.e. the lowest Landau level (LLL). The existence of the solutions of this equation is guaranteed by the Riemann-Roch theorem[5, 27]. The solutions belong to the sections of the holomorphic line bundle under the gauge field. The Riemann-Roch theorem tells us that $h^0(L) - h^1(L) = deg(L) - g + 1$, where $h^0(L)$ is the dimension of the sections of the holomorphic line bundle or the degeneracy of the ground states of the Hamiltonian H, $h^1(L)$ is the dimension of the holomorphic differential

$(L^{-1} \times K)$ where K is the canonical bundle and $deg(L)$ is the degree of the line bundle which is equal to the first Chern number of the gauge field, or the magnetic flux out of the surface, Φ. When $deg(L) > 2g-2$, $h^1(L)$ is equal to zero [5] and $h^0(L) = \Phi - g + 1$. As a consistent check, $h^0(L)$ indeed gives the right degeneracy of the ground states in the case of a particle on the sphere and torus interacting with a magnetic-monopole field.

If the Riemann surface Σ has g ($g > 0$) handles, there exist abelian differentials, g holomorphic and g anti-holomorphic closed 1-forms, ω_i and $\bar{\omega}_i$. They are normalized by

$$\int_{A_i} \omega_j = \delta_{ij} \ , \int_{B_i} \omega_j = \Omega_{ij} \tag{5.2}$$

where A_i, B_i are a canonical homology basis or closed loops around handles on Σ, and the imaginary part of Ω is a positive matrix. We consider the CθM metric given by

$$g_{z\bar{z}} = \bar{\omega}(Im\Omega)^{-1}\omega, \tag{5.3}$$

which is always greater than zero. This metric is proportional to the Bergman reproducing Kernel. It is also proportional to the curvature of the Arakelov metric (see Ref. [28]). Its most interesting feature (for our study here) is that it is proportional to the Chern form of the θ-function line bundle[1], implying the covariant derivatives match the transformation properties of the θ-function.

We note that [1]

$$V = \int_{\Sigma} dxdy\bar{\omega}(Im\Omega)^{-1}\omega = g. \tag{5.4}$$

Let us take Φ equal to γg. Because of Dirac quantization, γg must be an integer and here we assume that γg is a positive integer. We will explicitly construct the ground states in the case of γ being a positive integer here and the case of fractional γ will be discussed in section 5.5. Now we have $B = 2\pi\gamma$ and $F_{z\bar{z}} = \partial_z A_{\bar{z}} - \partial_{\bar{z}} A_z = i\pi\gamma\bar{\omega}(Im\Omega)^{-1}\omega$. We can take $A_{\bar{z}} = i\pi\gamma\bar{\omega}(Im\Omega)^{-1}u/2$, where $u^i = \int_{z_0}^{z} \omega^i$ and $A_{\bar{z}} = \bar{A}_z$ are the gauge potentials in a certain gauge.

The ground states satisfy the equation,

$$\bar{D}\Psi = (\bar{\partial} + \frac{\pi}{2}\gamma\bar{\omega}(Im\Omega)^{-1}u)\Psi = 0. \tag{5.5}$$

Because

$$\bar{D}(u + \Omega n + m) = K(n,m)^{-1}\bar{D}(u)K(n,m) \tag{5.6}$$

with

$$K(n,m) = \exp\gamma[S(n,m) - \bar{S}(n,m)]$$

and

$$S(n,m) = (\pi/2)\bar{u}(Im\Omega)^{-1}(\Omega n + m),$$

thus we can choose the boundary condition as [57],

$$K(n,m)\Psi(u + \Omega n + m) = \exp(i\alpha(n,m))\Psi(u). \tag{5.7}$$

Generally we can take $\alpha(n,m)$ as

$$\alpha(n,m) = \gamma\pi nm + 2\pi\gamma a_0 m - 2\pi b_0 n. \tag{5.8}$$

We define the function

$$\Psi = \exp[-(\pi/2)\gamma\bar{u}(Im\Omega)^{-1}u + (\pi/2)\gamma u(Im\Omega)^{-1}u]F. \tag{5.9}$$

Then the function F satisfies the equation,

$$F(u + \Omega n + m) = \exp(-i\pi\gamma n\Omega n - 2\pi i\gamma nu - i\gamma\pi nm + i\alpha(n,m))F(u). \tag{5.10}$$

The solutions of Eq. (5.10) are

$$F_i(u) = \theta\begin{bmatrix} a \\ b \end{bmatrix}(\gamma u|\gamma\Omega) \tag{5.11}$$

with $b = b_0$ and $a_i = (a_0)_i + l_i/\gamma$, $l_i = 0, \cdots, \gamma - 1$ and $i = 1, \cdots, g$. It seems that there are γ^g solutions. However, from the Riemann-Roch theorem, we know that the degeneracy is $\gamma g - g + 1$ when $\gamma > 1$ (remind that γ is a positive integer here, then we have $\gamma g > 2g - 2$

and $h^1 = 0$). We observe that when $g = 1$, $\gamma^g = \gamma g - g + 1$ but $\gamma^g > \gamma g - g + 1$ for $\gamma > 1$ and $g > 1$. In fact, generally the solutions given by Eq. (5.11) are not linear-independent. Take, for example, F_1 given by

$$F_1 = \theta \begin{bmatrix} a_1 \\ b \end{bmatrix} (\gamma u | \gamma \Omega), \tag{5.12}$$

then consider F_i/F_1 which are the meromorphic functions on the Riemann surface Σ. Because F_1 has γg zeros, for example, at $z_i, i = 1, \cdots, \gamma g$, the meromorphic functions will have possible poles at points z_i. The dimension of such meromorphic functions is given by the Riemann-Roch theorem, the number of the possible poles, γg, minus $g - 1$ in the case of $\gamma > 1$, which is equal to $\gamma g - g + 1$ and is the degeneracy of the ground states. If $\gamma = 1$, according to Eq. (5.11) there is only one solution (it is possible that this solution is identical to zero by the Riemann vanishing theorem and thus there will be no solutions). We remark that if $(a_0)_i = 1/2, (b_0)_i = \gamma/2$, the wave functions are transformed covariantly by the modular transformations (for the case of $g = 1$, see Ref. [57]).

5.3 Landau levels on Riemann surfaces with the Poincaré metric

When $g > 1$, the simply connected covering space of the surface Σ is the upper half plane H (for example, Refs. [27, 1]), and Σ is equal to H/Γ, where Γ is the discreet subgroup of the isometry group of H, isomorphic to the first homotopy of Σ. Γ is generated by the Fuchsian transformations around a canonical homology basis, $\Gamma_{A_i}, \Gamma_{B_i}$ with

$$\prod_{i=1}^{g} \Gamma_{A_i} \Gamma_{B_i} \Gamma_{A_i}^{-1} \Gamma_{B_i}^{-1} = 1. \tag{5.13}$$

The metric is given by the Poincaré metric, $ds^2 = y^{-2}(dx^2 + dy^2)$, and we note that $\int dv = \int y^{-2} dx dy = 2\pi(2g - 2)$ (without punctures). In the case of the Poincaré metric $g_{z\bar{z}} = y^{-2}$, the curvature is constant:

$$g^{z\bar{z}} R_{z\bar{z}} = -2 g^{z\bar{z}} \partial \bar{\partial} ln g_{z\bar{z}} = -1.$$

We take $F = Bdv$, and thus $A_z = -iB\partial(\ln g_{z\bar{z}})/2$ and the flux Φ is equal to $2B(g-1)$. Then we define $D = \partial - (B/2)\partial \ln g_{z\bar{z}}$ and $\bar{D} = \bar{\partial} + (B/2)\bar{\partial} \ln g_{z\bar{z}}$. The Hamiltonian is (we take $m = 2$ in Eq. (5.1) for the simplicity),

$$H = -g^{z\bar{z}} D\bar{D} + (B/4). \tag{5.14}$$

The eigenfunctions satisfy

$$H\Psi = E\Psi. \tag{5.15}$$

If $\tilde{z}$ is another local coordinate on Σ and the domain of $\tilde{z}$ intersects non-trivially the domain of z, $g_{z\bar{z}}dzd\bar{z}$ is invariant under coordinate changes, or

$$g_{z\bar{z}}dzd\bar{z} = g_{\tilde{z}\bar{\tilde{z}}}d\tilde{z}d\bar{\tilde{z}} \tag{5.16}$$

on the intersection of the domains of z and $\tilde{z}$. D and $\bar{D}$ are transformed as

$$\tilde{D} = (dz/d\tilde{z})U^{-1}DU \ , \tilde{\bar{D}} = (d\bar{z}/d\bar{\tilde{z}})U^{-1}\bar{D}U \tag{5.17}$$

where $U(z,\tilde{z}) = (dz/d\tilde{z})^{-B/2}(d\bar{z}/d\bar{\tilde{z}})^{B/2}$. The Hamiltonian is transformed as

$$\tilde{H} = U^{-1}HU, \tag{5.18}$$

thus the wave function is transformed as

$$\tilde{\Psi} = U^{-1}\Psi \tag{5.19}$$

or $\Psi(dz)^{B/2}(d\bar{z})^{-B/2}$ is invariant under the transformation. So we conclude that Ψ is a differential form of type $T^{\bar{B}/2}_{B/2}$. Furthermore, the wave function is transformed under the Fuchsian transformations as

$$\Psi(\gamma z) = u(\gamma, z)\Psi(z), \ u(\gamma, z) = \nu(B,\gamma)(cz+d)^{2B}/|cz+d|^{2B} \tag{5.20}$$

where γ is a Fuchsian group element $\begin{pmatrix} a & b \\ c & d \end{pmatrix}$ and $\gamma z = (az+b)/(cz+d)$. $\nu(B,-1) = e^{-i2\pi B}$ and $u(\gamma_1\gamma_2, z) = u(\gamma_1, \gamma_2 z)u(\gamma_2, z)$ are the consistency conditions ensuring univaluedness of

the wave function on the universal covering space [51]. The boundary condition is twisted if $\nu(B,\gamma) \neq 1$. The ground states are given by the solutions of the following equation,

$$\bar{D}\Psi_0 = 0. \tag{5.21}$$

The solutions of this equation are $\Psi_0 = g_{z\bar{z}}^{(-B/2)}\tilde{\Psi}_0$ with $\bar{\partial}\tilde{\Psi}_0 = 0$. $\tilde{\Psi}_0$ belongs to a differential form of type T_B. According to Eq. (5.20), $\tilde{\Psi}_0$ is transformed under the Fuchsian transformations as

$$\tilde{\Psi}_0(\gamma z) = u'(\gamma,z)\tilde{\Psi}_0(z),\ u'(\gamma,z) = \nu(B,\gamma)(cz+d)^{2B} \tag{5.22}$$

with $\nu(B,\gamma)$ defined in Eq. (5.20). When $B = 1$, T_B is the canonical holomorphic line bundle and $\tilde{\Psi}_0$ is given by the sections of the canonical holomorphic line bundle. By the Riemann-Roch theorem, we have $dim T_B - dim T_{1-B} = (2B-1)(g-1)$, where $dim T_B$ is the dimension of the sections of the holomorphic bundle T_B. The dimension (or the degeneracy of the ground states) of T_1 is g for the non-twisted boundary condition and is $g-1$ for the twisted boundary condition ($\nu \neq 1$), because $dim T_0 = 1$ for the non-twisted boundary condition and $dim T_0 = 0$ for the twisted boundary condition. When B is an positive integer which is greater than one, the dimension of T_B is $(2B-1)(g-1)$ by the Riemann-Roch theorem ($dim T_{1-B} = 0$, as $1-B$ is negative). When $B = 1/2$, $T_{1/2}$ is 1/2-differentials (the spin bundle). The dimension of $T_{1/2}$ is generically one for the odd-spin structures and zero for the even-spin structures. The energy of the ground states is $B/4$. An expression for the wave functions will be described in the next section. There we will also indicate generalizations to the case of fractional B, provided that $(2B-1)(g-1)$ is integer, and also possible generalizations to surfaces with punctures.

Here and in the following, we call $g = g_{z\bar{z}}$ for short. We introduce the covariant derivative, ∇_z, and its Hermitian conjugate $(\nabla_z)^\dagger = -\nabla^z$,

$$\begin{aligned} \nabla_z \quad &: T_k^l \to T_{k+1}^l\ , \nabla_z = g^k \partial g^{-k}, \\ (\nabla_z)^\dagger \quad &: T_k^l \to T_{k-1}^l\ , (\nabla_z)^\dagger = -g^{-l-1}\bar{\partial} g^l. \end{aligned} \tag{5.23}$$

Note that D is the covariant operator ∇_z acting on $T^{\bar{B}/2}_{B/2}$ ($\bar{D} = g\nabla^z$ where ∇^z acts on $T^{\bar{B}/2}_{B/2}$).

Let us next discuss the higher Landau levels. By writing

$$H - B/4 = -\nabla_z \nabla^z,$$

we notice that if Ψ_1 is an eigenfunction of H with eigenvalue $E_1 > B/4$, then $\Psi_1 = -\nabla_z \nabla^z \Psi_1/\epsilon_1$ (where $\epsilon_1 = E_1 - B/4 \neq 0$). Therefore $\Psi_1 = \nabla_z \Phi$ for some Φ. Of course, since Ψ_1 is of the form $T^{\bar{B}/2}_{B/2}$, then Φ will be of the form $T^{\bar{B}/2}_{B/2-1}$. Thus we have, more explicitly,

$$\Psi_1 = (\partial - (B/2 - 1)\partial lng)\Phi.$$

Due to the property of the Poincaré metric $\partial\bar{\partial} lng = g/2$, one can easily show that

$$-\nabla_z \nabla^z \Psi_1 = \frac{B-1}{2}\Psi_1 + \nabla_z(-\nabla_z \nabla^z \Phi).$$

When $B \geq 1$, one can show that $< \Psi_1 | \nabla_z(-\nabla_z \nabla^z \Phi) > \geq 0$. It is thus clear that the states of the lowest excited level are obtained, if there exist Φ such that $\nabla_z \nabla^z \Phi = 0$, i.e. $\bar{D}\Phi = 0$. This means that $\Phi = \Phi_0 = g^{-B/2}\tilde{\Phi}_0$ with $\bar{\partial}\tilde{\Phi}_0 = 0$. Since $\tilde{\Phi}_0$ is of the form T_{B-1}, there exist solutions of the equation $\bar{\partial}\tilde{\Phi}_0 = 0$ for $B \geq 1$. The energy of the lowest excited states is thus

$$E_1 = \frac{3}{4}B - \frac{1}{2}.$$

The degeneracy of this Landau level is the dimension of the sections of the holomorphic bundle T_{B-1} (which is equal to $(2B-3)(g-1)$ if $B > 2$). When $B < 1$, there is only the *zeroth* "Landau level" (the lowest Landau level). Beyond the "Landau levels", little is know about the spectrum. We will make a comment about this point at the end of the present section.

We can generalize the above discussion to high Landau levels. The wave function of the *kth* Landau level is given by

$$\begin{aligned} \Psi_k &= (\nabla_z)^k \Phi_0 \\ &= (\partial - (B/2-1)\partial \ln g)(\partial - (B/2-2)\partial \ln g) \\ &\quad \cdots (\partial - (B/2-k)\partial \ln g)\Phi_0 \end{aligned} \tag{5.24}$$

with $\tilde{\Phi}_0 = g^{B/2}\Phi_0$ and $\bar{\partial}\tilde{\Phi}_0 = 0$. $\tilde{\Phi}_0$ is a differential form of the type T_{B-k}. Notice that this construction generalizes the standard construction for the harmonic oscillator. By using the relation, which holds for the Poincaré metric,

$$[\nabla^z \nabla_z]T_n^m = -(m+n)/2, \tag{5.25}$$

one can explicitly check that Ψ_k is the eigenfunction of the Hamiltonian, with the eigenvalue as

$$E_k = [B(2k+1) - k(k+1)]/4. \tag{5.26}$$

The degeneracy of the kth Landau level is given by the dimension of the sections of the holomorphic bundle of the type T_{B-k}, which is equal to $(2B-2k-1)(g-1)$ when $B-k>1$. Because the dimension of T_n is zero when n is negative, k must not be greater than B. Hence there is only a finite number of "Landau levels".

When B is an integer, k can take value from 0 to B. When $k=B$, the corresponding $\tilde{\Psi}_0$ is the (holomorphic) differential form of the type T_0. T_0 is a constant function on the surface. We can also include twisted boundary conditions, which would physically correspond to the presence of some magnetic flux through the handles. If the boundary condition of the wave function is the twisted one, there does not exist a non-zero constant function which satisfies the twisted boundary condition. Thus the dimension of T_0 is zero in this case and there is not the Bth Landau level. When $k=B-1$, the degeneracy of this Landau level is the dimension of the canonical bundle T_1, which is equal to g for the non-twisted boundary condition and is equal to $g-1$ for the twisted boundary condition. B can be also an half-integer. Then k can take value from 0 to $B-(1/2)$. When $k=B-(1/2)$, the degeneracy of this Landau level is the dimension of the spin bundle $T_{1/2}$. The dimension of the holomorphic sections of the spin bundle generically is zero for the even-spin structures and one for the odd ones (or for twisted ones).

In the next section, we will show a construction of the wave functions and we will see that it is possible to generalize the present scheme also to the case of B fractional, provided

a condition is satisfied, and to include also "punctures" on the surface. We will also discuss the resulting spectrum of the Landau levels in the general case.

Of course, the "Landau levels" that we have found by the above method do not exhaust the spectrum. In fact, when k has reached the maximum value for which $s = B - k$ is positive or zero, we can still express $\Psi = \nabla_z^k g^{-B/2}\tilde{\Phi}$ where $\tilde{\Phi}$ is a T_s differential and get an additional infinity of levels and corresponding wave functions by the solutions of the eigenvalue equation for $-\nabla_z\nabla^z\tilde{\Phi}_n = E_n\tilde{\Phi}_n$. The corresponding eigenvalues for Ψ will be $E = \frac{1}{4}(B(2k+1) - k(k+1)) + E_n$. In particular, for an integer B, this will relate the general solution of our problem to the eigenvalues and eigenfunctions of the Laplacian on the scalar (i.e. the zero forms) on the Riemann surface with the Poincaré metric, a problem which is not completely solved and for which there exists a vast literature (for a recent review see Ref. [17]).

5.4 The wave functions of the Landau levels

In order to complete the construction of the wave functions of the "Landau levels" of the last section, we would like to describe $\tilde{\Phi}_0$, that is the holomorphic sections of the bundle corresponding to the differential of the type T_s. We will present a formula for the determinant $\det h_i(z_j)$, where h_i are the independent holomorphic sections and i, j run over the degeneracy of the Landau level. To get a particular wave function, it is of course enough to consider this determinant as a function of a particular z, fixing arbitrarily the remaining ones. We have anticipated from the Riemann-Roch theorem that the degeneracy is $N = (2s-1)(g-1)$, for s integer or half integer greater than 1, the cases $s = 1$, $s = 1/2$, $s = 0$ corresponding respectively to the g abelian differential, to the holomorphic spin structure(s) and to the constant respectively, as recalled above. The following formula does not make reference to any particular metric, as the notion of holomorphic differentials is introduced in a metric independent fashion.

The formula can be read from Ref. [53], and it has been obtained in a context of String

theory, following the work of Knizhnik[66]. It is:

$$\det h_i(z_j) = \theta \left[\begin{array}{c} a \\ b \end{array} \right] \left(\sum u_i - (2s-1) \sum_{i=1}^{g-1} r_i \right) \prod_{i=1}^{g-1} (\nu_0(z_i))^{2s-1} \times \prod_{i<j}^{N} E(z_i, z_j) / \prod_{i=1}^{N} \prod_{l=1}^{g-1} (E(z_i, r_l))^{2s-1}, \tag{5.27}$$

where $\nu_0(z)$ is a holomorphic half-differential with $g-1$ zeros, corresponding to an arbitrary (but fixed) odd characteristic and $\nu_0(r_i) = 0$, $i = 1, \cdots, g-1$. The symbol $E(z_i, z_j)$ denotes the "prime form", which is a $-1/2$ differential and it has only one zero for $z_i = z_j$ (for a review of definitions and transformation properties of the theta functions, prime forms etc., see for instance Ref. [52]). Recall that $h_i(z)$ is the solution of the following equation,

$$\bar{D} g^{-s/2} h(z) = g^{-s/2} \bar{\partial} h(z) = 0 \tag{5.28}$$

with $\bar{D} = \bar{\partial} + (s/2)\bar{\partial} \ln g$. What we discuss now is valid for any metric, not only for the Poincaré metric. The above equation implies that

$$\bar{D}_{z_k} \prod_{i=1}^{N} g^{-s/2}(z_i, \bar{z}_i) \det h_i(z_j) = 0. \tag{5.29}$$

Thus with respect to the coordinate z_i, the function $\det h_i(z_j)$ shall be a form of type T_s, which we can show directly from Eq. (5.27). Because the prime form is a $(-1/2)$ form and ν_0 is a $1/2$ form,

$$\frac{1}{2}(2s-1) - \frac{1}{2}((2s-1)(g-1)-1) + (2s-1)(g-1) = s, \tag{5.30}$$

which is the type of the form with respect to every coordinate z_i.

It is seen that it is indeed holomorphic, the zeroes in the denominator are canceled by corresponding zeroes in the numerator.

The variable in the theta function is $(\sum u_i - (2s-1)\sum_{i=1}^{g-1} r_i)$. We write the theta function in this way because the phase obtained by moving the coordinates around handles will be independent on the zeros r_i in this format (this is only for the convenience). We can also absorb it into the characteristics. In contrast to the case when the magnetic field is

proportional to the CθM metric, in the present case the gauge potential $A_z = -is\partial(\ln g)/2$ is single-valued around the handles. Thus the boundary condition shall be

$$h_i(u + \Omega n + m) = \exp(\alpha n + \beta m) h_i(u). \tag{5.31}$$

The above equation implies that

$$\det h_i(u_j + \Omega n + m) = \exp(\alpha n + \beta m) \det h_i(u_j). \tag{5.32}$$

The right side of Eq. (5.27) indeed transforms around the handles in the way described by Eq. (5.32). The values of α, β are determined by the type of the odd characteristic ν_0 and the values of the characteristics a, b of the theta function. Therefore by using Eq. (5.32), the characteristics a and b in Eq. (5.27) can be fixed uniquely.

By Eq. (5.22), it is easy to show that $\det h_i(z_j)$ shall transform in the case of the Poincaré metric under the Fuchsian transformations as

$$\det h_i(\gamma z_j) = u'(\gamma, z) \det h_i(z_j), \tag{5.33}$$

where $u'(\gamma, z)$ is given by Eq. (5.22). We can check that Eq. (5.27) transforms in the way of Eq. (5.33) in the case of the Poincaré metric. The transformations of the prime form and half-differential under the Fuchsian transformations can be found in Ref. [28]. $\nu(B, \gamma)$ corresponds to the boundary condition parameters and the characteristics a and b in Eq. (5.27) are fixed by $\nu(B, \gamma)$.

The formula Eq. (5.27) makes sense also for s fractional, provided that $N = (2s-1)(g-1)$ is a positive integer, giving the multiplicity of the level (apart from the particular case $s = 1$ recalled above), for generic characteristics a, b corresponding to twisted boundary conditions. The value of s for this case is $s > 1/2$. The dual line bundle will be a form of the type T_v with $v = 1 - s < 1/2$. If $s > 1$, since there are no holomorphic T_v forms with $v < 0$, N is the multiplicity for any characteristic. In the case where $1 > s > 1/2$, then $1/2 > v > 0$, and for the generic moduli of the Riemann surface, there will be one holomorphic T_v form for some characteristics. Thus, for these characteristics, the multiplicity of the level corresponding to

T_s will be $N+1$. The formula for the wave function would be in this case a generalization of Eq. (5.27)[28]. For those characteristics there exists also a Landau level, generically with multiplicity 1, for those $s < 1/2$ for which $(1-2s)(g-1)$ is a positive integer.

Since $s = B - k$ (recalled from the last section), this means that we find Landau levels provided that $(2B-1)(g-1)$ is a positive integer, or, with some characteristics, that $(1-2B)(g-1)$ is a nonnegative integer (remember that we assume $B > 0$). Therefore the general condition for the existing of Landau levels is that $2B(g-1)$ is integer, that is the Dirac quantization condition. We remind that the energy of the level is

$$E_k = \frac{1}{4}(B(2k+1) - k(k+1))$$

corresponding to $s = B-k$. Thus we see that the Landau level of maximal energy is obtained for the value of k which is nearest to $B - 1/2$. If B is integer then the maximal energy is $B^2/4$, if B is half integer the maximal energy is $\frac{1}{4}(B^2+1/4)$. If B is another allowed fraction, the maximal energy is intermediate between the previous two.

This discussion about Eq. (5.27) can be further generalized to the case of "punctures", which formally corresponds to the possibility of allowing poles for Φ_0 at some points of the surface, with the understanding that those points are infinitely far (with the Poincaré metric) from any other points. This means that the puncture can be taken at infinity or on the real axis in the upper half-plane, the surface making a narrow cusp there such that the area is still finite. Thus this discussion makes now use of a particular metric on the Riemann surface. Quantum mechanically we require the wave function to be normalizable and (taking the puncture at infinity) this implies for a differential T_s requiring $(y^2)^{s-2}|T_s|^2$ to be integrable in y for $y \to \infty$. This means that the poles of T_s can be of order s at most, since a pole of order r at $z = \infty$ would imply $\lim_{y\to\infty} T_s \sim y^{r-2s}$ as it is seen by the appropriate change of chart. If we allow for punctures at say $w_1, ..., w_n$, we have the freedom of generalizing Eq. (5.27) by multiplying the r.h.s by $\prod_i \prod_l (E(z_i, w_l))^{-s}$ and subtracting $(s\sum w_l)$ from the argument of the theta function (this insures that (5.32) continues to hold). This construction gives again

a T_s differential provided now $N = (2s-1)(g-1)+ns$, which is the new multiplicity of the level (we should be aware that $N = (2s-1)(g-1)+ns$ may not be true in the case of $s \leq 1$. See the previous discussion).

Finally, a further generalization could consist in allowing for some twists on the punctures, corresponding to considering branch points rather than poles at w_l.

5.5 The Laughlin wave function on Riemann surfaces

5.5.1 The Laughlin wave functions in the constant field on the surface with the Poincaré metric

In the present section, we will discuss the Laughlin wave functions in the constant field on the surface with the Poincaré metric. In the next subsection, the Laughlin states in the constant magnetic field will be worked out in the case of the magnetic field which is proportional to the CθM metric. The mathematical structure behind the Laughlin wave functions will be discussed in the end of this subsection. We shall remark that the following discussions can be generalized to the case of the magnetic field being proportional to the curvature, if we take the Hamiltonian in a special ordering,

$$H = -g^{z\bar{z}} D\bar{D} \tag{5.34}$$

with $A_z = -iB\partial(\ln g)/2$ and g is an arbitrary metric. The magnetic field is a constant one if the curvature is constant, for example, in the case of the Poincaré metric (see the last section). The generalization is straight forward and we will not discuss it here.

Following section 5.3, we take $F_{z\bar{z}} = iB\bar{\partial}\partial \ln g$, $A_z = -iB\partial(\ln g)/2$ and $g > 1$. The ground states satisfy the equation, $\bar{D}\Psi_0 = 0$ and the solution of the equation is $\Psi_0 = g^{-B/2}\tilde{\Psi}_0$ with $\partial\tilde{\Psi}_0 = 0$. Ψ_0 is T_B differentials. $h_i(z)$ are the solutions of the equation $\partial\tilde{\Psi}_0 = 0$. In the FQHE, the magnetic field applied is very strong. Thus B is a very large number and the number of the sections of the holomorphic T_B differentials is equal to $(2B-1)(g-1)$. If the ground states are completely filled, which corresponds to the case of the quantum Hall state with filling $\nu = 1$, the wave function of the quantum Hall state is given by $\Psi_{JL} =$

$\prod_{i=1} g^{-B/2}(z_i\bar{z}_i) \det h_i(z_j)$ where $i = 1, \cdots, (2B-1)(g-1)$ (Ψ_{JL} stands for the Jastrow-Laughlin type wave function).

A formula for $\det h_i(z_j)$ has been shown and discussed in the previous section, see Eq. (5.27). For any quantum Hall state, we write $\Psi_{JL} = \prod_{i=1} g^{(-B/2)}(z_i\bar{z}_i)\Psi'_J$ and Ψ'_J is a holomorphic function of the coordinates of any electrons, as Ψ_{JL} satisfies the equation $\bar{D}_{z_i}\Psi_{JL} = 0$ (we have this equation because every electron stays in the LLL). The boundary condition, Eq. (5.20) or Eq. (5.22) for the single particle implies a boundary condition on the many-body wave function (here is the wave function of the Hall state),

$$\Psi'_{JL}(\gamma z_j) = u'(\gamma, z)\Psi'_{JL}(z_j), \tag{5.35}$$

with $u'(\gamma, z)$ given by by Eq. (5.22). Furthermore, by using Eq. (5.35), the characteristics a and b in Eq. (5.27) can be fixed uniquely. Hence the degeneracy of the Hall state at filling $\nu = 1$ is one (from the physical points of view, there is only one way to completely fill the lowest Landau levels).

If the filling is equal to $1/m$, we make an Ansatz for the wave function,

$$\Psi_{JL} = \prod_{i=1} g^{(-B/2)}(z_i\bar{z}_i)\Psi'_{JL},$$

and

$$\begin{aligned}\Psi'_{JL} &= \theta\begin{bmatrix} a \\ b \end{bmatrix}\left(m\sum u_i - Q\sum_{i=1}^{g-1} r_i | m\Omega\right)\prod_{i=1}^{g-1}(\nu_0(z_i))^{Q_1} \\ &\quad \times \prod_{i<j}^{N}(E(z_i,z_j))^m \Big/ \prod_{i=1}^{N}\prod_{l=1}^{g-1}(E(z_i,r_l))^{Q_2},\end{aligned} \tag{5.36}$$

where N is the number of the electrons. Q_1 must be equal to Q_2, otherwise, there will be singularities at r_i. The way we write the theta function in Eq. (5.36) is based on the intuition from the wave function on the torus. Moreover, under the Fuchsian transformation, Eq. (5.36) shall be transformed as Eq. (5.35). This implies that $Q_1 = Q_2 = 2B - m$ and $m(N-1+g) = 2B(g-1) = \Phi$. And we take $Q = Q_1$ for the same reason in the case of $\nu = 1$. The characteristics a and b are determined by the boundary condition, which gives

$$b = b_0,\ a = a_0 + l/m,\ l_i = 1, \cdots, m,\ i = 1, \cdots, g, \tag{5.37}$$

where a_0 and b_0 depend on the boundary value parameters α and β. The above equation does not imply that the degeneracy of the Laughlin wave functions is m^g. According to the second section, the linear-independent number of the functions

$$\theta \left[\begin{array}{c} a \\ b \end{array} \right] \left(m \sum u_i - Q \sum_{i=1}^{g-1} r_i | m\Omega \right) \tag{5.38}$$

is $mg - g + 1$ and thus the degeneracy is actually $mg - g + 1$

There is a deep mathematical structure behind the Laughlin wave functions. In the case of $\nu = 1$, we know the wave function is given by the determinant of the sections of the holomorphic line bundle. In the case of $\nu = m$ with m greater than 1, the Laughlin wave functions is given by the determinant of the sections of the holomorphic rank-m vector bundle. The discussion about the determinant of the sections of the holomorphic vector bundle can be found in Ref. [28].

We consider a line bundle with connection $A'_z = -iB'\partial \ln g/2$ (thus $\Phi' = 2B'(g-1)$ is the corresponding magnetic flux and is a positive integer). We take $B' = B/m$ for the reasons to be seen later. Under the Fuchsian transformations, the transformations of the line bundle are given by Eq. (5.20) with the replacement of B by B'. We also introduce a flat vector bundle of rank-m with a flat connection. The flat vector bundle $\Psi(\gamma z)_k$ transforms under the Fuchsian transformations as

$$\Psi(\gamma z)_k = \sum_{i=1}^{m} \chi(\gamma)_{kj} \Psi(z)_j,$$

where $\chi(\gamma)$ is a constant matrix. We define a vector bundle E as the tensor product of the line bundle and the flat vector bundle. The vector bundle then is transformed under the Fuchsian transformations as,

$$\Psi(\gamma z)_k = \sum_{l=1}^{m} u(\gamma, z)_{kl} \Psi(z)_l, \;\; u(\gamma, z) = \nu(B', \gamma)(cz + d)^{2B'} / |cz + d|^{2B'} \tag{5.39}$$

where γ is a Fuchsian group element and $\nu(B', \gamma)$ is now a $m \times m$ matrix. Following the discussion about the line bundle, we shall have

$$\nu(B', -1) = e^{-i2\pi B'}, u(\gamma_1\gamma_2, z) = u(\gamma_1, \gamma_2 z) u(\gamma_2, z)$$

are the consistency conditions ensuring univaluedness of the wave function on the universal covering space. The holomorphic sections of the vector bundle is the solution of the following equation,

$$(P_{\bar{z}_i} - A'_{\bar{z}})\vec{\Psi}(z) = 0. \tag{5.40}$$

where $\vec{\Psi}(z)$ is a m-dimension vector with the component $\Psi(z)_k$. The degree of the vector bundle is $deg(E) = m \times \Phi' = \Phi$. We assume here Φ' or Φ is much larger than one (because we apply a very strong magnetic field in the FQHE), h^1 is zero by the Kodaira vanishing theorem, which states that there do not exist the sections of the one-form holomorphic vector bundle or the holomorphic vector bundle $E^{-1} \times K$ where E is the vector bundle and K is the canonical bundle. It is possible to see that the vector bundle $E^{-1} \times K$ is negative[96]. Then by the Kodaira vanishing theorem, the dimension of the sections of the holomorphic vector bundle $E^{-1} \times K$ is zero[96]. From the Riemann-Roch theorem for the vector bundles, the dimension of the sections of the holomorphic vector bundle is

$$h^0(E) = h^1(E) + deg(E) + m(1-g) = \Phi + m(1-g).$$

Suppose the basis of the vector bundle is given by $\vec{\Psi}_i(z)$ with $i = 1, \cdots, h^0(E)$, we can construct a determinant, $\det \vec{\Psi}_i(z_j)$ with $j = 1, \cdots, N$ and $N = h^0(E)/m$.

One can show that

$$\bar{\partial} \det(\Lambda_{i,j}) = \sum_k \det(\Lambda'_{i,j}(k)) \tag{5.41}$$

where the matrix $\Lambda'_{i,j}(k)$ is given by $\Lambda'_{i,j}(k) = \Lambda_{i,j}$, $i \neq k$ and $\Lambda'_{k,j}(k) = \bar{\partial}\Lambda_{k,j}$. By using Eq. (5.41) and Eq. (5.40), we can prove that

$$(P_{\bar{z}_i} - mA'_{\bar{z}}) \det \vec{\Psi}_i(z_j) = 0. \tag{5.42}$$

$\det \vec{\Psi}_i(z_j)$ is an anti-symmetric functions with respect to the interchange of any coordinates z_i and z_j. Thus the above equation shows that $\det \vec{\Psi}_i(z_j)$ is the wave function of the electrons interacting with the magnetic field $mA'_z = A_z$. The flux out of surface of this magnetic field A_z is equal to $\Phi = m\Phi'$. We shall show that $\det \vec{\Psi}_i(z_j)$ is a Laughlin type wave

function. Furthermore, we have a relation $m(N-1+g)=\Phi$ and the above discussions offer a mathematical explanation of this relation for the Laughlin states. This relation had been used to calculate the spin of the quasiparticle in Ref. [83] and the value of the spin is found to be topological independent.

Now we shall prove that $\det \vec{\Psi}_i(z_j)$ is a Laughlin type wave function. By Eq. (5.39), one can also show that

$$\det \vec{\Psi}_i(\gamma z_j) = \det(\nu(B,\gamma))(cz_j+d)^{2B}/|cz_j+d|^{2B} \det \vec{\Psi}_i(z_j) \tag{5.43}$$

with $\det(\nu(B,-1)) = e^{-i2\pi B}$. Thus $\det \vec{\Psi}_i(z_j)$ transforms in the same way as the Laughlin wave function Ψ_{JL}. Moreover, when $z_i \to z_j$, we can easily show that $\det \vec{\Psi}_i(z_j) \to (z_i - z_j)^m$. Thus the function obtained by taking the ratio of $\det \vec{\Psi}_i(z_j)$ with

$$\prod_{i=1}^{g-1} (\nu_0(z_i))^{2B-m} \prod_{i<j}^{N} (E(z_i,z_j))^m \Big/ \prod_{i=1}^{N} g^{B/2}(z_i,\bar{z}_i) \prod_{i=1}^{N}\prod_{l=1}^{g-1} (E(z_i,r_l))^{2B-m},$$

has no poles. By using Eq. (5.40), one can show that this function is an holomorphic function of coordinates z_i. Furthermore, by using Eq. (5.43), we find that this function transforms exactly in the way as the theta functions in Eq. (5.38). This holomorphic function must be equal to one of the theta functions in Eq. (5.38). Thus we complete our prove that $\det \vec{\Psi}_i(z_j)$ is a Laughlin type wave function. Similar arguments, for example in Ref. [110], had been used in proving some identities.

From the discussion of the previous section, B can be fractional in the above formulae (the above Laughlin wave functions make sense even B is fractional), but N and Φ must be integers.

We comment that the construction of the Laughlin wave function by the determinant of the sections of the holomorphic vector bundle can also apply to the case of $g=0,1$. It seems to us that the degeneracy of Laughlin wave functions is related to the different choice of the basis of the sections of the holomorphic vector bundle. Finally we shall point out that the hierarchical wave function on the Riemann surface can also be constructed by following the method developed in Ref. [80, 81]

5.5.2 The Laughlin wave functions in the constant field on the surface with the CθM metric

Following section 5.2, we take $F_{z\bar{z}} = \partial_z A_{\bar{z}} - \partial_{\bar{z}} A_z = i\pi\gamma\bar{\omega}(Im\Omega)^{-1}\omega$. $A_{\bar{z}} = i\pi\gamma\bar{\omega}(Im\Omega)^{-1}U/2$. The ground states are given by

$$\begin{aligned} \Psi_i &= X(u)F_i(u), \\ X(u) &= \exp[-(\pi/2)\gamma\bar{u}(Im\Omega)^{-1}u + (\pi/2)\gamma u(Im\Omega)^{-1}u], \end{aligned} \tag{5.44}$$

where $i = 1, \cdots, \gamma g - g + 1$ and we assume here that $\gamma > 1$ and γ is an integer. We remark that the following formula for the wave function is true also in the case of fractional γ and $\gamma g > 2g - 2$ (remind that γg is always an integer). F_i are the linear independent solutions of Eq. (5.10). The wave function of the electrons when the first Landau levels (or ground states) are completely filled (the filling is equal to 1 in this case) is then

$$\Psi_{\nu=1} = \det\left(X(u_j)F_i(u_j)\right) = \prod_i X(u_i)\det\left(F_i(u_j)\right). \tag{5.45}$$

$\det\left(F_i(u_j)\right)$ can be calculated even we do not know how to select $F_i(u)$, the linear independent solutions of Eq. (5.10). According to Ref. [28], $\det\left(F_i(u_j)\right)$ is equal to

$$\theta\begin{bmatrix} a \\ b \end{bmatrix}\left(\sum u_i\right)\prod_{i<j}^{N} E(z_i, z_j)f(z_1, \cdots, z_N), \tag{5.46}$$

where $N = \gamma g - g + 1$, $f(z_i, z_j) = f(z_j, z_i)$ and $f(z_i)$ has no zeros with respect to any coordinates. The function $f(z_i)$ can be determined by the boundary condition. From Eq. (5.10), we have

$$\begin{aligned} \det\left(F_i(u_j + \Omega n + m)\right) &= \exp(-i\pi\gamma n\Omega n - 2\pi i\gamma n u_j \\ &\quad -i\gamma\pi nm + i\alpha(n, m))\det\left(F_i(u_j)\right). \end{aligned} \tag{5.47}$$

Remarkably, we find that $\det F_i(u_j)$ is given by the same formula as that in Eq. (5.27), that is $\det F_i(u_j) = \det h_i(z_j)$. One has only to replace $2s$ by γ and take $N = \gamma g - g + 1$ (instead of $N = 2s(g-1) - g + 1$, as it was in Eq. (5.27)). One can then verify that Eq. (5.47) is indeed satisfied. Moreover, the characteristics a and b are uniquely fixed by the boundary

condition. We are not surprised that $\det F_i(u_j)$ is given by Eq. (5.27) because both of them are the determinants of the holomorphic sections of bundles.

If filling $\nu = 1/m$, the Laughlin wave functions are given by, $\Psi_{JL} = \prod_i X(u_i)\Psi'_J$ with Ψ'_J taking the same form as Eq. (5.36). However, now we shall take $Q = Q_1 = Q_2 = \gamma - m$, $\gamma = \Phi/g$ compared with $Q = 2B - m$ and $B = \Phi/2(g-1)$ in the case of the Poincaré metric. Always, we have the relation $m(N-1+g) = \Phi$. The wave functions shall satisfy the boundary condition

$$\begin{aligned}\Psi'(u_i + \Omega n + m) &= \exp(-i\pi\gamma n\Omega n - 2\pi i\gamma n u_i \\ &\quad -i\gamma\pi nm + i\alpha(n,m))\Psi'(u_i). \end{aligned} \tag{5.48}$$

and the characteristics a and b in Eq. (5.36) can be fixed by the boundary condition, e.g., Eq. (5.48). The characteristics are given $b = b_0$, $a = a_0 + l/m$. $l_i = 1, \cdots, m$ and $i = 1, \cdots, g$, where a_0 and b_0 depend on the boundary value parameters $\alpha(n,m)$. It is easy to see that the degeneracy of the Laughlin wave functions is also equal to $mg - g + 1$.

By making continuation of γ, γ can be fractional, although N and Φ are always integers. Now we can show how to obtain the ground state wave functions of a particle interacting with a constant magnetic field with the CθM metric in the case of fractional γ. When $\gamma g > 2g - 2$ and γ being fractional, the degeneracy of the ground states is still given by $N = \gamma g - g + 1$ and the wave function of the electrons at filling $\nu = 1$ is still given by Eq. (5.27) multiplied by $\prod_i X(u_i)$. The wave function of a single particle can be obtained by fixing the coordinates of other particles in the wave function of the electrons at filling $\nu = 1$ in this case.

5.5.3 The degeneracy of the Laughlin state, a general discussion

We have show that the degeneracy of some Laughlin states in the last two subsections is $mg - g + 1$ and we will try to show here that, generally, the degeneracy of Laughlin states is $mg - g + 1$ under some reasonable assumptions. The Laughlin type wave function is the many particle wave function which looks like $\Psi_{JL} = F(z_1, \cdots, z_N)\prod_{i<j}[f(z_i, z_j)]^m$, where $f(z_i, z_j) = -f(z_j, z_i)$ and it is a function on holomorphic coordinates z_i and z_j. Furthermore

when z_i approaches z_j, $f(z_i, z_j)$ is proportional to $z_i - z_j$ and only when $z_i = z_j$, $f(z_i, z_j) = 0$. The only function with those properties on Riemann surfaces is the prime form function $E(z_i, z_j)$. Because every particle stays in the lowest Landau level, so $(P_{\bar{z}_i} - A_{\bar{z}_i})\Psi_{JL} = 0$, Hence the Laughlin wave function will be

$$\Psi_{JL} = \prod_{i=1}^{N} \exp[\int A_{\bar{z}_i} d\bar{z}_i] \prod_{i<j}^{N} [E(z_i, z_j)]^m \times F'(z_1, \cdots, z_N) \tag{5.49}$$

where $F'(z_i)$ is a function of holomorphic coordinates z_i. F' shall be determined by the boundary condition on the surface which is compatible with the Hamiltonian. Suppose that the magnetic field is smooth enough, we expect that Ψ_{JL} has no poles and $\exp[\int A_{\bar{z}_i} d\bar{z}_i]$ has no zeros and poles. We have shown that $m(N - 1 + g) = \Phi$ for the Laughlin states in the last two subsections and offered a mathematical explanation of this relation. Thus we can assume that $m(N - 1 + g) = \Phi$ is true for any Laughlin states. Because the degree is equal to Φ, so Ψ_{JL} has Φ zeros with respect to every coordinate. The number of zeros (counting the order of the zeros) in the function $\prod_{i<j}[E(z_i, z_j)]^m$ is $m(N - 1)$ with respect to z_i. So the remaining $\Phi - m(N - 1) = mg$ zeros are contained in the function F'. Suppose we have solutions F_i', thus $G_i = \frac{F_i'}{F_1'}$ is a meromorphic function with respect to z_i, where F_1' is one of the solutions (possibly some zeros in F_i' cancel some zeros in F_1'). From the previous discussion, we make an assumption that G_i is a function of the center coordinate $\sum_i z_i$. Because the meromorphic function can be always given by one θ function divided by another θ function, so the meromorphic function with poles at the points which lie on some zeros of the function F_1' is given by

$$G_i = \frac{\theta\begin{bmatrix} a_i \\ b_i \end{bmatrix}(mu|m\Omega)}{\theta\begin{bmatrix} a_1 \\ b_1 \end{bmatrix}(mu|m\Omega)} \tag{5.50}$$

where now $u = \sum_i \int^{z_i} \omega$ and $\theta\begin{bmatrix} a_1 \\ b_1 \end{bmatrix}(mu|m\Omega)$ has same zeros as F_1'. By Riemann-Roch theorem, the number of such linear independent meromorphic functions is $mg - g + 1$ for $m > 1$ ($m = 1$ is the case of the integer QHE and the degeneracy of the Hall state is one). Thus the number of the linear independent functions F_i' or the degeneracy of the Laughlin states is $mg - g + 1$. However in Refs. [85, 113], it was pointed out that the degeneracy of the Laughlin states is

s m^g on the surface with g handles. In Ref. [113], Wen and Niu analyzed the Chern-Simons effective theory of the FQHE to get the degeneracy of the Laughlin states. In the Chern-Simons theory, there are so called large components of gauge fields (for example, Ref. [16]) and one part of the wave function is $F_l'(\mathcal{A}) = \theta\left[\begin{smallmatrix} a_0+\frac{l}{m} \\ b_0 \end{smallmatrix}\right](mu + m\mathcal{A}|m\Omega)$, where $\mathcal{A}$ is the large component of the gauge field, $a_0 + \frac{l}{m}, b_0$ take values in $\mathbf{R}^g/\mathbf{Z}^g$ and a_0, b_0 is dependent on the boundary condition. The phase space of $\mathcal{A}$ is Jacobian variety $\mathbf{C}^g/\mathbf{Z}^g + \Omega\mathbf{Z}^g$. Because $\mathcal{A}$ is now a dynamical variable, all m^g functions $F_l'(\mathcal{A})$ are independent with each other. Thus the degeneracy of the Laughlin states is m^g. However if we suppose that $\mathcal{A}$ is a constant vector, the number of the linear independent functions among $F_l'(\mathcal{A})$ is $mg - g + 1$.

6 Fractional statistics and spin in the FQHE

We have discussed the statistics and spin of quasiparticles in the FQHE on the sphere or on the torus in previous chapters. We will discuss them here in this chapter by considering the briad group on any compact Riemann surfaces and thus give them an unified view.

We derive the braid relations of the charged anyons interacting with a magnetic field on Riemann surfaces. The braid relations are used to calculate the quasiparticle's spin in the fractional quantum Hall states on Riemann surfaces. The quasiparticle's spin is found to be topological independent and satisfies physical restrictions. We also discuss the odd-denominator rule by using the fractional statistics of quasiparticles.

6.1 Fractional statistics and fractional spin on Riemann surfaces

The possibility of fractional statistics on two dimensional surfaces was discovered in Ref. [77, 36, 116]. When two fractional-statistics particles (anyons) are interchanged, the wave function changes by a phase $\exp(i\theta)$, where θ is neither $\theta = 0$ (Bose statistics) nor $\theta = \pi$ (Fermion statistics). Fractional statistics attracts a lot of attention after it was found that a gas of fractional statistics object should be superconducting and could be the essential mechanism behind high-T_c superconductivity [73]. Furthermore the quasiparticles in fractional quantum Hall systems (for a review on the fractional quantum Hall effect (FQHE), see Ref. [91]) are anyons [6, 48] and this picture had been used to construct the hierarchical wave function in the FQHE [48] (see also chapter 3 and 4; for a review, see Ref. [117, 57]). On higher dimension

spaces ($D > 2$), only Fermion and Boson exist and the Fermion's spin is an half-integer, the Boson's spin is an integer. It will be very interesting to know what is the spin of anyons and the spin-statistics relation of anyons. The spin-statistics relation of anyons is generalized one if the spin s equals to $s = \theta/2\pi$. Anyons in various models, for example, in non-linear sigma models, Chern-Simons field theories and relativistic quantum field theories on $2D$ dimension spaces indeed have the generalized spin-statistics relation [108, 31]. Naturally, we will ask the question what is the spin-statistics relation of the quasiparticle in the FQHE. The recent discussion about the quasiparticle's spin (QPS) can be found in Refs. [78, 79, 82, 115, 98]. Reference. [78, 79, 82] calculated the QPS by analyzing the hierarchical wave function or by calculating the Berry phase of the quasiparticles moving in a closed path on the sphere (see also chapter 3). Reference. [115] obtained the QPS by analyzing the Ginzburg-Laudau-Chern-Simons (GLCS) theory of the FQHE on the sphere. On the other hand, Reference. [98] calculated the QPS based on the GLCS theory on the disc geometry. However, the results in Refs. [78, 79, 82, 115, 98] are different from each other. The ambiguity of the QPS in the literature is due to lack of a good definition of the QPS.

We will calculate here the QPS by using braid relations of anyons on Riemann surfaces [119, 106, 24, 114, 25, 59, 13]. We will show that the QPS calculated in the following is consistent with physical restrictions and is intrinsic in the sense of its topological independence. The results here is agreed with the results of Ref. [78, 79, 82].

6.1.1 Braid group on Riemann surfaces

Let us consider N spinning anyons on an oriented compact Riemann surface with g handles[25, 59, 13]. To define the anyon's spin, we attach an oriented local frame to every particle. When a particle moves on a curved surface (the torus is a flat surface), the attached frame is parallel transported and a path-dependent frame-rotation is associated with the particle transport. Let us denote the clockwise 2π rotation of the frame attached to the particle by $R_{2\pi}$. The action of the operator $R_{2\pi}$ on the wave function will give a phase $\exp(i2\pi S)$. We define S as

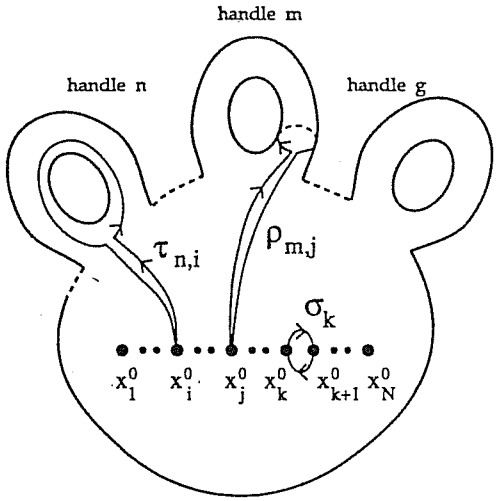

Figure 6.1: The braid group generators on Riemann surfaces.

the spin of the particle. S is equal to $1/2$ for the electron by this definition. The braiding operators are σ_i, $\rho_{n,i}$, $\tau_{n,i}$, where σ_i interchanges (clockwise) particle i and particle $i+1$ and $\rho_{n,i}$, $\tau_{n,i}$ take particle i around noncontractable loops on the *mth* handle. Here we use the same definition of operators $\rho_{n,i}$, $\tau_{n,i}$ as Ref. [25]. The braid relations for spinning anyons on the Riemann surface with g handles are

$$\sigma_j\sigma_{j+1}\sigma_j = \sigma_{j+1}\sigma_j\sigma_{j+1}, \tag{6.1}$$

$$\tau_{m,j+1} = \sigma_j^{-1}\tau_{m,j}\sigma_j, \rho_{m,j+1} = \sigma_j^{-1}\rho_{m,j}\sigma_j, \tag{6.2}$$

$$\rho_{m,j}^{-1}\tau_{m,j+1}\sigma_j^{-2}\rho_{m,j}\sigma_j^2\tau_{m,j+1}^{-1} = \sigma_j^2, \tag{6.3}$$

$$\sigma_1\sigma_2\cdots\sigma_{N-1}^2\cdots\sigma_2\sigma_1 = R_{2\pi}^{2(g-1)}\prod_n^g \rho_{n,1}^{-1}\tau_{n,1}^{-1}\rho_{n,1}\tau_{n,1}. \tag{6.4}$$

For the spinless anyons on the sphere, Equation (6.4) becomes

$$\sigma_1\sigma_2\cdots\sigma_{N-1}^2\cdots\sigma_2\sigma_1 = 1$$

which had been derived in Ref. [106]. It expresses the fact that a closed (clockwise) loop of particle 1 around all the other particles can be continuously shrunk to a point on the rear side of the sphere. Eq. (6.4) is the generalization of the case of the spinless anyons on the sphere to the spinning anyons on general Riemann surfaces[25, 59]. When we deform the loop of the left side of Eq. (6.4) to the loop of the right side of Eq. (6.4), described by $\prod_n^g \rho_{n,1}^{-1}\tau_{n,1}^{-1}\rho_{n,1}\tau_{n,1}$, the attached spin frame of is rotated ($4\pi(g-1)$ rotation), we obtain a phase $R_{2\pi}^{2(g-1)}$. We need to include this phase in the right side of the equation. However for the charged anyons in magnetic field, which is the case of quasiparticles in FQHE, the braid relation (6.4) should be changed. We also need to include the Aharonov-Bohm phase $\exp(2\pi iq\Phi)$ in the right of Eq. (6.4) because the charged anyon interacts with the magnetic field, where q is the anyon's charge and Φ is the magnetic flux out of the surface. Thus in stead of Eq. (6.4), for the charged anyons on the magnetic field, we have

$$\begin{aligned}\sigma_1\sigma_2\cdots\sigma_{N-1}^2\cdots\sigma_2\sigma_1 &= \exp(2\pi iq\Phi)R_{2\pi}^{2(g-1)} \\ &\times \prod_n^g \rho_{n,1}^{-1}\tau_{n,1}^{-1}\rho_{n,1}\tau_{n,1}. \end{aligned} \tag{6.5}$$

We will only consider the Abelian fractional statistics, which means that the representation of operator σ_i is given by $\sigma_i = \sigma = \exp i\theta 1_M$, where 1_M is the $M \times M$ identity matrix. Inserting $\sigma_i = \sigma = \exp i\theta 1_M$ in Eq. (6.2) and Eq. (6.3), one obtains that $\tau_{m,j} = \tau_m$, $\rho_{m,j} = \rho_m$, $\tau_m\rho_m = \sigma^2\rho_m\tau_m$. These relations and Eq. (6.5) yield

$$\begin{aligned}\exp[2i(N-1)\theta] &= \exp[2\pi iq\Phi + 4\pi(g-1)S] \\ &\times \exp(-2ig\theta). \end{aligned} \tag{6.6}$$

If there are several kinds of anyons, we shall introduce mutual statistics[118]. The mutual statistics $\theta_{i,j}$ means that when a particle of the ith kind moves clockwise around a particle of the jth kind, we get a phase $\exp(2\theta_{i,j})$. $\theta_{i,i} = \theta_i$ actually is the fractional statistics parameter of the particle of the ith kind. The left hand of Eq. (6.6) is a phase which is obtained by moving one particle (clockwise) around all other particles. If there exist other kinds of

particles, instead of Eq. (6.6), we have

$$\exp[2i(N_i-1)\theta_i + 2i\sum_{j\neq i}^{l} N_j\theta_{i,j}] = \exp(-2ig\theta_i) \times \exp[2\pi i q_i\Phi + 4\pi(g-1)S_i], \tag{6.7}$$

where there are l different kinds of particles and the spin of the particle of the ith kind is S_i and the charge is q_i. Eq. (6.7) gives a constraint on the parameters (numbers, statistics and spin) of anyons that

$$[((N_i-1+g)\theta_i + \sum_{j\neq i}^{l} N_j\theta_{i,j})/\pi] - q_i\Phi - 2(g-1)S_i \tag{6.8}$$

is an integer.

6.1.2 Quasiparticle's spin in the Laughlin state revisited

Now we consider the FQHE on a surface with g handles. If the filling factor is $1/m$ in the state of the FQHE, the relation between the electron numbers and the flux for the FQHE at the filling factor as $1/m$ is then $m(N+g-1) = \Phi$ (see Ref. [58]; also chapter 5). If N_q quasiparticles are created, one has $m(N+\Delta_g) + N_q = \Phi$. The mutual statistics between the electron and quasiparticle is $2\theta_{mut} = 2\pi$, the charge of the quasiparticle is $1/m$ and the statistics parameters is π/m. We remark that, if $2\theta_{i,j} = 2\pi, i \neq j$ in Eq. (6.8) or Eq. (6.7), we can simply omit the term $N_j\theta_{i,j}$. By applying Eq. (6.8) to those N_q quasiparticles, one can show that

$$[(N_q-1+g)/m] + N - [\Phi/m] - 2(g-1)S_q \tag{6.9}$$

is an integer. From Eq. (6.9) and the equation $m(N+\Delta_g) + N_q = \Phi$, the QPS turns out to be $S_q = [1/2m] + [n/2(g-1)]$ (n is an integer and $g \neq 1$ is assumed). Let us discuss how to fix n. We consider a cluster of particles which contains n_i particles of the ith kind with the mutual statistics $\theta_{i,j}$. By using the method developed in Ref. [106], we get the statistics, spin and charge of the cluster,

$$S_c = \sum_i [n_i(n_i-1)\theta_i/2\pi] + n_iS_i + \sum_{i\neq j} n_in_j\theta_{i,j}/2\pi \tag{6.10}$$

and $q_c = \sum n_i q_i$ and $\theta_c = \sum_i n_i^2 \theta_i + \sum_{i \neq j} n_i n_j \theta_{i,j}$ are the charge and statistics of the cluster respectively. If the cluster's charge is an odd (even) integer and the cluster satisfies the fermionic (bosonic) statistics, we suppose that the cluster contains only an odd (even) number of electrons (for example, see Ref. [30]), and thus the cluster's spin is an half-integer (integer). If the cluster contains m quasiparticles in the above example, the cluster's charge is 1 and its statistics of is fermionic. This cluster shall be the hole of the electron and the cluster's spin is an half-integer (see also Ref. [29]). By using Eq. (6.10) for this cluster, we get a restriction for the QPS, $[mn/2(g-1)] = integer$. If m and $g-1$ are coprime to each other (for example, g is equal to $0, 2, 3$), n must be equal to $2n'(g-1)$ (n' is an integer). Thus S_q is equal to $1/2m$ (up to an integer) and the spin-statistics relation is the standard one. However, when m and $g-1$ are not coprime to each other for some high genus surfaces, there exist other solutions for the spin except $1/2m$. We write $m = kp$ and $g-1 = kq$, where p and q are coprime to each other, we have solutions $n = 2n'q$. The other solutions of the QSP is $S_q = [1/2m] + [n'/k]$ where $n' = 1, \cdots, k-1$. Therefor S_q can not be completely fixed by using the braid group analysis. However, we shall point out that it is highly unlikely that those **other** solutions are the **true** QPS, as we expect that the value of the spin shall be intrinsic and does not depend on the surface where quasiparticles live. To completely fix the QPS on Riemann surfaces, we can obtain the QPS by analyzing the wave function of the quasiparticles on Riemann surfaces (we plan to do so elsewhere), as it was done for the case on the sphere[78, 79, 82].

6.1.3 Quasiparticle's spin in the hierarchical state

Let us calculate the QPS in the standard hierarchical state (see Ref. [48, 78, 79, 82, 38, 14, 93, 85, 80, 81]; also chapters 3 and 4). We remark that the method here can be used to calculate the QPS in other kinds of quantum Hall fluids, for example, the multi-layered FQHE or Jain state[61] etc.. The hierarchical state is described by a symmetric matrix $\Lambda_{i,j}, i, j = 1, 2, \cdots, l$, where $\Lambda_{i,i+1} = \Lambda_{i+1,i} = \pm 1$, $\Lambda_{1,1}$ is an odd integer and $\Lambda_{i,i}, i \neq 1$ are even integers, where l is the level of the hierarchical state and N_i is the number of the particles

in level i (N_1 is the number of the electrons, N_2 is the number of the condensed quasiparticles (or holes) of the first level (Laughlin) state, etc.). On the torus[40, 80, 81], we have a relation, $\sum_j \Lambda_{i,j} N_j = \delta_{i,1}\Phi$, and on the sphere[78, 79, 82, 38], the relation is $\sum_j \Lambda_{i,j} N_j - \Lambda_{i,i} = \delta_{i,1}\Phi$. Following the discussion about the Laughlin state on Riemann surfaces, we expect that the relation is $\sum_j \Lambda_{i,j} N_j + (g-1)\Lambda_{i,i} = \delta_{i,1}\Phi$ for the hierarchical state on Riemann surfaces. We define a l dimension integer lattice with bases E_i and the inner products $E_i \cdot E_j = \Lambda_{i,j}$ (see Ref. [80, 81]; see also chapters 3 and 4). The above equation can be rewritten as

$$\sum_{i=1}^{l} N_i E_i + (g-1)(E_i \cdot E_i) E_i^\star = E_1^\star \Phi, \tag{6.11}$$

where $E_i^\star$ are the bases of the inverse lattice E_i and defined by $E_i^\star \cdot E_j = \delta_{i,j}$. From chapter 4, we know that $E_i^\star \cdot E_j^\star = \Lambda_{i,j}^{-1}$. The quasiparticle is described by a vector $\mathcal{Q}_k = k_i E_i^\star$ (k_i is an integer) on the lattice $E_i^\star$ (see Refs. [14, 93]; or chapter 4). The statistics parameter of this quasiparticle is $\theta_k = \mathcal{Q}_k \cdot \mathcal{Q}_k \pi = \sum_{i,j} k_i \Lambda_{i,j}^{-1} k_j$ and the charge is $Q_k = \mathcal{Q}_k \cdot E_1^\star = \sum_i k_i \Lambda_{i,1}^{-1}$. The mutual statistics between the quasiparticles $\mathcal{Q}_k$ and $\mathcal{Q}_{k'}$ is $\theta_{k,k'} = \mathcal{Q}_k \cdot \mathcal{Q}_{k'} \pi = \sum_{i,j} k_i \Lambda_{i,j}^{-1} k'_j$. If N quasiparticles denoted by the vector $\mathcal{Q}_k$, is created, one has $\sum_{i=1}^{l} N_i E_i + (g-1)(E_i \cdot E_i) E_i^\star + N\mathcal{Q}_k = E_1^\star \Phi$. Making inner product on two sides of this equation with $\mathcal{Q}_k$, one yields

$$\frac{N\theta_k}{\pi} + (g-1)\Delta \cdot \mathcal{Q}_k - Q_k \Phi = integer, \tag{6.12}$$

where $\Delta = \sum_{i=1}^{l} (E_i \cdot E_i) E_i^\star$. Applying Eq. (6.8) to those quasiparticles and comparing it with Eq. (6.12), one gets

$$S_k = \frac{\theta_k}{2\pi} - \frac{\Delta \cdot \mathcal{Q}_k}{2} + \frac{n}{2(g-1)}, \; n = integer. \; g \neq 1. \tag{6.13}$$

By using the argument in Ref. [106] (which we did for the quasiparticle of the Laughlin state), we can fix n in some cases. The charge of the quasiparticle E_i (denoted by the vector E_i) is $\delta_{i,1}$ and the statistics is $\theta = \delta_{i,1}\pi$. Thus the spin of this quasiparticle is $\frac{\delta_{i,1}}{2} + integer$. Because $E_i = \sum_j \Lambda_{i,j} E_j^\star$, the quasiparticle E_i is a cluster which contains $\Lambda_{i,j}$ quasiparticles with the vector as $E_j^\star$. If $\det \Lambda$ and $g-1$ are coprime to each other, by using Eq. (6.10) for

the cluster, we find that $S_i = \frac{E_i \cdot E_i}{2} - \frac{\Delta \cdot E_i}{2} - \frac{1}{2}$ for the quasiparticle $E_j^\star$ when $l - i$ is an even integer and $S_i = \frac{E_i \cdot E_i}{2} - \frac{\Delta \cdot E_i}{2}$ when $l - i$ is an odd integer. We will use notation $i \in i_e$ if $l - i$ is an even integer. Generally, for the quasiparticle $\mathcal{Q}$, we find that

$$S_{\mathcal{Q}} = \frac{\mathcal{Q} \cdot \mathcal{Q}}{2} - \frac{\Delta \cdot \mathcal{Q}}{2} - \frac{1}{2}\Delta' \cdot \mathcal{Q}, \tag{6.14}$$

where $\Delta' = \sum_i E_i, i \in i_e$. If the quasiparticles have the standard spin-statistics relation, it is required that $\frac{\Delta \cdot \mathcal{Q}}{2} + \frac{1}{2}\Delta' \cdot \mathcal{Q}$ is an integer. Indeed, this number is always an integer for the Laughlin state. However, in the hierarchical state, this number may not be an integer. Thus the quasiparticles in the hierarchical state usually do not have the standard spin-statistics relation.

If $\det \Lambda$ and $g - 1$ are not coprime to each other, there exist other solutions, not only Eq. (6.14). As we argued in the case of the Laughlin state, these **other** solutions is **unlikely** the **true** QPS. Thus we suppose that Eq. (6.14) is the spin for quasiparticles and it is topological independent. The above method does not give any information about the QPS in the FQHE on the torus ($g = 1$). However, the above discussion strongly suggests that the QPS in the FQHE on the torus is also given by Eq. (6.14) which suppose to be the QPS on any Riemann surfaces.

The Lagrangian for the long-distance physics of the Hall fluid on Riemann surfaces is [115],

$$\begin{aligned} \mathcal{L} &= \frac{1}{4\pi}(\alpha_{\mu,i}\Lambda_{i,j}\epsilon^{\mu\nu\lambda}\partial_\nu\alpha_{\lambda,j} + 2A_\mu t_i\epsilon^{\mu\nu\lambda}\partial_\nu\alpha_{\lambda,i} \\ &+ 2\omega s_i\epsilon^{0\nu\lambda}\partial_\nu\alpha_{\lambda,i}), \end{aligned} \tag{6.15}$$

where ω is the connection one form (the curvature is given by $R = d\omega$). In the case of the hierarchical state, t_i is equal to $\delta_{i,1}$ and the matrix Λ is one we gave in the previous discussion. By using Eq. (6.11), we can show that $s_i = \Lambda_{i,i}$. So s_i is a topological independent constant. It is reasonable to believe that s_i is a topological independent constant for any kinds of quantum Hall fluids. Due to the presence of the third term in the Lagrangian, the spin-statistics relation usually is not generalized one [115].

In summary of this section, the QPS in some fractional quantum Hall states on Riemann surfaces has been calculated by using the braid relation for spinning anyons. The value of the QPS obtained satisfies physical restrictions and is found to be topological independent. Because the methods used here are rather general, they can be used to calculate the particles's spin in other quantum Hall fluids, chrial spin fluids and anyon superfluids.

6.2 The odd-denominator rule and fractional statistics

Ref. [103] gave an elegant argument to explain a remarkable observation that all stable FQH states for $\nu < 1$ occur at fractional fillings with an odd denominator (see also Ref. [119]).

If a cluster of quasiparticles has an integer charge n, the cluster is assumed to be made of n electrons. This is usually true in the spin-polarized FQH fluids. For a filling fraction $\nu = q/p$ with p and q coprime to each other, we create a quasiparticle by turning on a thin flux-tube which pierces the fluid with unit flux. Then q/p electrons will be removed (or added) around the tube by the radial Hall current. The statistics of this quasiparticle will be $\theta = q\pi/p$(see also Ref. [101]). A cluster of p such quasiparticle will be q electrons which has a statistics parameter as $q\pi$. However, from the discussion about the statistics of the cluster, we will have a statistics parameter as $\theta \times p^2 = pq\pi$. So we shall have an equation

$$(-1)^{pq} = (-1)^q. \tag{6.16}$$

In order that this equation holds, p must be an odd integer. Note that $\nu = 5/2$ state is excluded in this discussion, because it involves electrons with both up and down spin.

Bibliography

Bibliography

[1] L. Alvarez-Gaumé and P. Nelson, in Proceedings of the Trieste Spring School, 1986.

[2] T. Ando, Y. Matsumoto and Y. Uemura, J. Phys. Soc. Japan **39**, 956 (1974).

[3] M. Antoine, A. Comtet, and S. Ouvry, J. Phys. **A23**, 3699 (1990).

[4] H. Aoki, Rep. Prog. Phys. **50**, 655 (1987); and references therein.

[5] E. Arbarello, M. Cornalba, P.A. Griffiths and J. Harris, Geometry of Algebraic Curves, Volume I (Springer-Verlag, New York, Berlin, Heidelberg, Tokyo, 1985).

[6] D. Arovas, J.R. Schriffer and F. Wilczek, Phys. Rev. Lett. **53** , 722 (1984).

[7] D. Arovas, Topics in Fractional Statistics, in "Geometric Phase in Physics" edited by A. Shapere and F. Wilczek (World Scientific, Singapore, 1989).

[8] M. Asorey, J. Geom. and Phys. (to be published).

[9] J.E. Avron, R. Seiler, and B. Simon, Phys. Rev. Lett. **51**, 51 (1983).

[10] J.E. Avron, and R. Seiler, Phys. Rev. Lett. **54**, 259 (1985).

[11] J.E. Avron, M. Klein, A. Pnueli and L. Sadun, Phys. Rev. Lett. **69**, 128 (1992); references therein.

[12] M.V. Berry, Proc. Roy. Soc. London, Ser. **A392**, 45 (1984); For a review and some reprints about Berry phase, see "Geometric Phase in Physics", edited by A. Shapere and F. Wilczek (World Scientific, Singapore, 1989).

[13] A.P. Balachandran, T. Einarsson, T.R. Govindarajan and R. Ramachandran, Mod. Phys. Lett. **A6**, 2801 (1990).

[14] B. Blok, X.G. Wen, Phys. Rev. **B42**, 8145 (1990); ibid. **43**, 8337 (1991).

[15] J. Bolte and F. Steiner, J. Phys. **A24**, 3817 (1991).

[16] M. Bos and V.P. Nair, Int. J. Mod. Phys. **A5**, 959 (1990).

[17] P. Buser, Geometry and Spectra of Compact Riemann Surface (Birkhäuser, 1992).

[18] N. Byers and C.N. Yang, Phys. Rev. Lett **7**, 46 (1961).

[19] S. Coleman, "The magnetic monopole fifty years later", lecturers given at the 1981 "International School of Subnuclear Physics" (Ettore Majorana), Erice, Italy.

[20] A. Comtet, Annals of Phys. **173**, 185 (1987).

[21] A. Comtet, J. McCabe and S. Ouvry, Phys. Rev. **D45**, 709 (1992).

[22] J.H. Conway and N.J.A. Sloane, "Sphere Packings, Lattices and Groups" (Springer-verlag, 1988).

[23] G. Cristofano, G. Maiella, R. Musto and F. Nicodemi, Hall Conductance and Edge States in the Coulomb Gas Vertex Operator Formalism. DSF-T-91/6 and INFN-NA-IV-91/6.

[24] T. Einarsson, Phys. Rev. Lett. **64**, 1995 (90).

[25] T. Einarsson, Mod. Phy. Lett. **B5**, 675 (91); T. Einarsson, PhD thesis, 1992.

[26] Z.F. Ezawa and A. Iwazaki, Phys. Rev. **B43**, 2637 (1991).

[27] H.M. Farkas and I. Kra, "Riemann Surfaces" (Springer-Verlag, Berlin, 1980).

[28] J. Fay, "American Mathematical Society", Memoirs, no. 464 (Providence, Rhode Island, 1992).

[29] J. Fröhlich and P.A. Marchetti, Nucl. Phys. B**356**, 533 (1991).

[30] J. Fröhlich and A. Zee, Nucl. Phys. B**364**, 517 (1991).

[31] J Frölich and U.M. Studer. Incompressible Quantum Fluids, Gauge-Invariance, and Current Algebra; $U(1) \times SU(2)$-Gauge Invariance of Nonrelativistic Quantum Mechanics, and Generalized Hall Effects, preprints.

[32] S.M. Girvin, Phys. Rev. **B29**, 6012 (1984).

[33] S.M. Girvin, A.H. MacDonald, and P.M. Platzman, Phys. Rev. Lett. **54**, 581 (1985); Phys. Rev. **B33**, 903 (1986).

[34] S.M. Girvin and A. MacDonald, Phys. Rev. Lett. **56**, 1252 (1987); S.M. Girvin, Summary, Omissions and Unanswered Questions, chapter 10 in Ref. [91].

[35] S.M. Girvin, Recent Developments, the appendix in Ref. [91].

[36] G.A. Goldin, R. Menikoff and D.H. Sharp, J. Math. Phys. **22**, 1664 (81)

[37] M.C. Gutzwiller, "Chaos in Classical and Quantum Mechanics"(Springer-Verlag, 1990).

[38] F.D.M. Haldane, Phys. Rev. Lett. **51**, 605 (1983).

[39] F.D.M. Haldane and E.H. Rezayi, Phys. Rev. Lett. **54**, 237 (1985).

[40] F.D.M. Haldane and E.H. Rezayi, Phys. Rev. **B31**, 2529 (1985).

[41] F.D.M. Haldane, Phys. Rev. Lett **55**, 2095 (85).

[42] F.D.M. Haldane and E.H. Rezayi, Phys. Rev. Lett. **60**, 956 (1988); Erratum:**60**, 1886 (1988).

[43] F.D.M. Haldane, The Hierarchy of Fractional States and Numerical Studies, chapter 8 in Ref. [91].

[44] E.H. Hall, Am. J. Math. **2**, 287 (1879).

[45] E.H. Hall, Phil. Mag. **9**, 225 (1880).

[46] B.I. Halperin, Phys. Rev. **B25**, 2185 (1981).

[47] B.I. Halperin, Helv Phys Acta **56**, 75 (1983).

[48] B.I. Halperin, Phys. Rev. Lett. **52**, 1583 (1984); **52**, 2390(E) (1984).

[49] Y. Hatsugai and M. Kohmoto, and Y.-S. Wu, Phys. Rev. **B43**, 10761 (1991).

[50] S. He, W.P. Su, Phys. Rev. Lett. **70**, 1163 (1993).

[51] D. Hejhal, "Lecture Notes in Mathematics", Vol. 548 (Springer-Verlag, Berlin, 1976), Pt. 1; ibid., Lecture Notes in Mathematics Vol. 1001 (Springer-Verlag, Berlin, 1983), Pt. 2.

[52] E. D'Hoker and D.H. Phong, Rev. of Mod. Phys **60**, 917 (1988); and references therein.

[53] R. Iengo and B. Ivanov, Phys. Lett. B **203**, 89 (1988).

[54] R. Iengo and K. Lechner, Nucl. Phys. **B346**, 551 (1990).

[55] R. Iengo and K. Lechner, Nucl. Phys. **B365**, 551 (1991).

[56] R. Iengo, K. Lechner and D. Li, Phys. Lett. **B269**, 109 (1991).

[57] R. Iengo and K. Lechner, Phys. Rep. C**213**, 179 (1992); and references therein.

[58] R. Iengo and D. Li, Quantum Mechanics and Fractional Quantum Hall Effect on Riemann Surfaces, SISSA/ISAS/100/93/EP, preprint.

[59] T. Imbo and J. March-Russell, Phys. Lett. **B252**, 84 (1990).

[60] C. Itzykson and J. Drouffe, Statistical Field Theory, chapter 10, Vol. 2 (Cambridge, 1989).

[61] J.K. Jain, Phys. Rev. Lett **63**, 199 (1989); Phys. Rev. **B40**, 8079 (1989); **41**, 7653 (1990); Adv. in Phys. **41**, 105 (1992).

[62] S. Kawaji, T. Igarashi and J. Wakabayashi, Prog. Theo. Phys. Suppl. **57**, 176 (1975).

[63] E. Keski-Vakkuri and X.G. Wen, CTP-2197, preprint, March, 1993.

[64] S. Kivelson, C. Kallin, D.P. Arovas, and J.R. Schrieffer, Phys. Rev. Lett. **56**, 873 (1986); G. Baskaran, Phys. Rev. Lett. **56**, 2716 (1986); Z. Su, H. Pang, Y. Xie, and K. Chou, Phys. Lett. **A123**, 249 (1987).

[65] M.A.C. Kneipp, Int. J. Mod. Phys. **A7**, 4477 (1992).

[66] V. Knizhnik, Phys. Lett. **B180**, 247 (1986).

[67] M. Kohmoto, Ann. Phys. (NY)**160**, 343 (1985).

[68] R. Laughlin, Phys. Rev. **B23**, 5632 (1981).

[69] R. Laughlin, Phys. Rev. Lett. **50**, 1395 (1983).

[70] R. Laughlin, Surf. Sci. **142**, 163 (1984).

[71] R. Laughlin, Elementary Theory: Imcompressible Quantum Fluid, chapter 7 in Ref. [91].

[72] R. Laughlin, Fractional Statistics in the Quantum Hall Effect, in Ref. [117].

[73] R.B. Laughlin, Phys. Rev. Lett. **60**, 2677 (1988); V. Kalmeyer, R.B. Laughlin, Phys. Rev. Lett. **59**, 2095 (1988); C.B. Hanna, R.B. Laughlin, and A. L. Fetter, Phys. Rev. **B40**, 8745 (1989). C.B. Hanna, R.B. Laughlin, and A.L. Fetter, Phys. Rev. **B39**, 9679 (1989). X.G. Wen, F. Wilczek, and A. Zee, Phys. Rev. **B39**, 11413 (1989). Y.H. Chen, F. Wilczek, E. Witten, and B. Halperin, Int. J. Mod. Phys. **B3**, 1001 (1989).

[74] K. Lechner, Phys. Lett. **B273**, 463 (1991); PhD thesis, Trieste, 1991.

[75] D-H. Lee and C.L. Kane, Phys. Rev. Lett. **64**, 1313 (1990).

[76] K. Lee, Anyons on Spheres and Tori, Preprint BU/HEP-89-28.

[77] J.M. Leinaas and J. Myrheim, Nuovo Cimento B**37**, 1 (77)

[78] D. Li, Phys. Lett. **A169**, 82 (1992).

[79] D. Li, Nucl. Phys.**B396**, 411 (1993) (FS).

[80] D. Li, Int. J. Mod. Phys. **B7**, 2655 (1993).

[81] D. Li, Int. J. Mod. Phys. **B7**, 2779 (1993).

[82] D. Li, Phys. Rev. **B47**, 13370 (1993).

[83] D. Li, Intrinsic Quasiparticle's Spin and Fractional Quantum Hall Effect on Riemann Surfaces, SISSA/ISAS/53/93/EP, To appear in Mod. Phys. Lett. B.

[84] A.H. MacDonald and D.B. Murray, Phys. Rev. **B32**, 2702 (1985); A.H. MacDonald et al., ibid. **31**, 5529 (1985).

[85] G. Moore and N. Read, Nucl. Phys. B**360**, 362 (1991).

[86] D. Mumford, "Tata Lectures on Theta I and II" (Birkhäuser, Boston, 1983).

[87] Q. Niu, D.J. Thouless, and Y.-S. Wu, Phys. Rev. **31**, 3372 (1985).

[88] Q. Niu and D.J. Thouless, Phys. Rev. **35**, 2188 (1987).

[89] B.A. Ovrut and S. Thomas, Phys. Rev. **D43**, 1314 (1991).

[90] R.E. Prange, Phys. Rev. **B23**, 4802 (1981).

[91] R. Prange and S. Girvin, "The Quantum Hall Effect" (Springer-Verlag, New York, Heidelberg, 1990, 2nd ed); and references therein.

[92] N. Read, Phys. Rev. Lett. **62**, 86 (1989).

[93] N. Read, Phys. Rev. Lett. **65**, 1502 (1990).

[94] E.H. Rezayi, Phys. Rev. **B39**, 13541 (1989).

[95] B. Schwarzschild, Phys. Today, July, 1993.

[96] B. Shiffman and A.J. Sommese, "Vanishing Theorems on Complex Manifolds", Progress in Mathematics, Vol. 56 (Birkhäuser, Boston, Basel, Stuttgart, 1985).

[97] B. Simon, Phys. Rev. Lett. **51**, 2167 (1983).

[98] S.L. Sondhi and S.A. Kivelson, Phys. Rev. **B46**, 13319 (1992).

[99] P. Středa, J. Phys. **C15**, 717 (1982).

[100] W.P. Su, Phys. Rev. **B30**, 1069 (1984).

[101] W.P. Su, Phys. Rev. **B34**, 1031 (1986).

[102] R. Tao, and Y.-S. Wu, Phys. Rev. **B30**, 1097 (1984).

[103] R. Tao, and Y.-S. Wu, Phys. Rev. **B31**, 6859 (1985).

[104] R. Tao, and F.D.M. Haldane, Phys. Rev. **B33**, 3844 (1986).

[105] D.J. Thouless, M. Kohmoto, M.P. Nightingale, and M. den Nijs, Phys. Rev. Lett. **49**, 405 (1982).

[106] D. Thouless and Y.-S. Wu, Phys. Rev. B**31**, 1191 (1985).

[107] S.A. Trugman, and S.A. Kivelson, Phys. Rev. **B31**, 5280 (1985).

[108] R.D. Tscheuschner, Int. J. Theoretical Phys. **28**, 1269 (1989); and references therein.

[109] D.C. Tsui, H.L. Stömer and A.C. Gossard, Phys. Rev. Lett **48**, 1559 (1982).

[110] E. Verlinde and H. Verlinde, Nucl. Phys. B **288**, 357 (1987).

[111] K. von Klitzing, G. Dorda and M. Pepper, Phys. Rev. Lett **45**, 495 (1980).

[112] X.G. Wen, Phys. Rev. **B40**, 7378 (1989); Int. J. Mod. Phys. **B2**, 239 (1990).

[113] X.G. Wen and Q. Niu, Phys. Rev. **B41**, 9377 (1990).

[114] X.G. Wen, E. Daggoto, and E. Fradkin, Phys. Rev. **B42**, 6110 (1990).

[115] X.G. Wen and A. Zee, Phys. Rev. Lett **69**, 953 (1992); Erratum: **69**, 3000 (1992).

[116] F. Wilczek, Phys. Rev. Lett. **49**, 957 (1982).

[117] F. Wilczek, "Fractional Statistics and Anyon Superconductivity" (World Scientific, Singapore, 1990); references therein.

[118] F. Wilczek, Phy. Rev. Lett. **69**, 132 (1992); and references therein.

[119] Y.-S. Wu, Phys. Rev. Lett. **52**, 2103 (1984)

[120] Y.-S. Wu, in "Physics, Geometry, and Topology", NATO ASI Series, edit by H.C. Lee.

[121] T.T. Wu and C.N. Yang, Phys. Rev. **D12**, 3845 (1975).

[122] D. Yoshioka, A. MacDonald, S.M. Girvin Phys. Rev. **B39**, 1932 (1988);

[123] A. Zee, ITP preprint 91-100.

[124] F.C. Zhang and X.C. Xie, Phys. Rev. **B40**, 11449 (1989).

[125] S.C. Zhang, T.H. Hansson, and S. Kivelson, Phys. Rev. Lett. **62**, 82 (1989).

[126] S.C. Zhang, Int. J. Mod. Phys. **B6**, 25 (1992).

Acknowledgements

At first and foremost I would like to thank my supervisor Professor Roberto Iengo for his guidance which led to the works in this thesis. I have profited from many stimulating discussions and enjoyed collaboration with him. Furthermore, his critical reading the thesis leads it to the present form.

I am also very grateful to Professor L. Bonora, Professor S. Ceccoti, Professor K.C. Chou, Professor B. Dubrovin, Dr. T. Einarsson, Dr. M.A.C. Kneipp, Dr. K. Lechner, Professor J.M. Leinaas, Professor S. Ouvry, Dr. R. Percacci, Professor A. Schwimmer, Professor Y.-S. Wu and Professor Z.B. Su for discussions and useful suggestions. I also sincerely thank Professor D. Amati for helping me to come to SISSA and Professor P. Fré for arranging me to participate the European science program. The work in the thesis is partially support by ECC, Science Project SCI*-CT92-0789.

Finally I would like to thank all the SISSA staff and students for their help and friendship.

This thesis is dedicated to my mother for her sixtieth birth day.